Dillon School District Four
Technology Plan
2017 - 2020

Dillon School District Four
1738 Highway 301 North
Dillon, SC 29536
Telephone: (843) 774-1200
Fax: (843) 774-1203
http://www.dillon.k12.sc.us

District Superintendent: Mr. D. Ray Rogers

Director of Technology: Ms. Paula Yohe

Mr. D. Ray Rogers, District Superintendent

Ms. Paula Yohe, Director of Technology

Table of Contents

I. Cover Page

II. District Profile

III. Executive Summary

IV. District Needs Assessment

V. District Vision and Mission Statements

VI. Plans for the Five Individual Technology Dimensions

VII. Cumulative Benchmarks

VIII. Acknowledgements

IX. Bibliography

X. Appendices
Appendix 1: Teacher Technology Proficiency Proviso Professional Development Plan

Attachments

1. Technology Inventory & IT Skills Inventory
2. Network Diagram
   2A. Client Software
   2B. Server List
3. Internet Use Policy (Faculty/Staff and Student)
4. Other attachments/exhibits as needed

II. District Profile

Background Information

School District Overview

Number of schools in district	8
Number of students enrolled	4213
CEP (Community Eligibility Provision)	100%
Number of English Learners (EL) students	183
Number of dropouts	15
Graduation rate	87.7%
District E-rate discount	85%

Dillon School District Four provides a wide range of technology for teachers and students. Each school in the district has a (LAN) Local Area Network which is connected to the (WAN) Wide Area Network. All schools will have Windows servers. Dillon School District Four has a hosted website. Internet access, individual teacher webpages, and email accounts are provided to each staff member and students. Office 365 is provided so staff and students can access email from any location within the district or from home. Access to the DISCUS virtual library is available at each school and at home. A variety of instructional software is available throughout the district. Dillon School District Four has a web-based library system, Destiny, that provides 24/7 access to resources for students and teachers.

Dillon School District Four has benefited from the E-rate program. E-rate provided funds allowed the district to help give students and staff better Internet access through hardware and cabling upgrades over the years.

Parents and members of the community are invited to visit every school in Dillon School District Four.

III. Executive Summary

This document provides the framework for the integration of instructional technology, technical needs, monitoring, and evaluating the effectiveness of technology in Dillon School District Four. The plan resulted from individual and collective analysis of faculty, staff, student and community needs. They reflect the district's overall goal to provide all stakeholders with technically integrated educational programs. The rapidly-changing world of technology is affecting all aspects of our everyday lives. We rely on technology for communication, entertainment, and increased production in the workplace. Competitive businesses and industries are using new management technologies to their fullest advantage to ensure economic survival.

Schools must keep abreast of innovations in technology. We cannot teach our students everything they need to know, but it is essential that we teach them how to access and manage information through the use of' technology. We must use technology as a tool both to enhance the teaching/learning environment and to prepare graduates for the computer-based technologies they will encounter as they enter the workforce. In addition, we must use technology to improve management at all levels.

This plan has been developed to provide a flexible guide for the integration of technology into all aspects of operations in Dillon School District Four.

Surveys utilized in the development of this plan provide the foundation for the need for more equipment and for appropriate and ongoing staff training, technology training, and the emphasis on appropriate integration into the curriculum to improve student achievement.

The district technology planning committee was established from a wide variety of personnel in the district. This planning committee consists of the five chairpersons for each area covered in the district plan. Each team worked on their section of the plan. Surveys and needs analysis were conducted by various teams in order to gain an understanding of needs within the district. A writing team composed of the committee chairpersons and district office staff completed the final plan.

Long Term Goals

- Seamlessly integrate technology into classroom instruction in an effort to ensure teacher and student understanding and usage.
- Update existing physical network infrastructure, based upon the "Online Testing Readiness Assessment", to support district and state requirements of curricular and instructional processes, and classroom and administrative management.
- Incorporate the District Strategic Plan into the Technology Plan.
- Integrate the goals of the "Every Student Succeeds Act" (ESSA).

IV. District Needs Assessment

Current State of Technology – Assessment and Needs (See Attachment I)

Assessment

Students were provided with opportunities to use a variety of technology tools in their classrooms and media centers. Students received instruction on using a variety of technology tools from classroom teachers and the media specialist. Meetings were held with community agencies that provide assistive technology and assistive technology workshops were attended. All students from PreK-12 have email accounts.

A wide variety of in-service and training workshops were held for district personnel in learning new software programs and equipment available throughout the district. Information on technology integration is provided to teachers through newsletters, email, a SharePoint Technology Information site and the district website. A random survey was conducted to determine what areas of professional development needed to be enhanced. Train the trainer workshops were held for several different district software packages and this information shared with all schools. A district trainer provides individual, school-based and group training.

A random district wide survey was conducted to determine what areas of instructional professional development needed to be enhanced. Online resources provide 24-hour access to students and teachers. Destiny library system provides additional access to students while allowing teachers the ability to locate resources and information aligned to standards. New web-based instructional software was put in place district wide.

Meetings were held with a wide variety of community agencies to determine the collaborative efforts the district and agencies could foster to promote the use of technology. Parent workshops on the use of technology were held at some schools. Classes are held in the evenings for community members. A calling system is in place for suspensions, absences, and other school related events. This system also interfaces with the district website and the district's Facebook page. The local newspaper publicizes school events. Flyers and bookmarks are placed around the community in different stores to provide information for technology access.

All classrooms have at least one Internet capable computer. A Disaster Recovery Plan was developed and is constantly being revised. Computers are replaced and updated as funds become available. The district has 1:1 in Grades 3 and 4 with plans to expand to Grade 5 and hopefully beyond as funds become available. Additional carts of tablets are available for checkout in every school. Additional labs were added but more are needed as we move toward online testing. The district and each school have a website. Each teacher has the capability to create a teacher webpage. Infrastructure updates were completed.

Needs Assessment

Current Technology Needs:

- Increase WAN bandwidth
- Increase instructional software library
- Expand instructional support staff for technology
- Increase up to date teacher/student desktops and laptops
- Address training on instructional software and district devices
- Upgrade security cameras
- Annual training for Media Specialists
- Add additional labs
- Add additional technology coach
- Implement a technology staff pay scale
- Security audit
- Additional laptop carts
- Expand 1:1 program
- Update lab furniture
- Formal network performance testing
- Backup generator
- Develop a formal refresh plan
- Continue to explore grants
- Continue to cross-train staff
- Continue to survey teachers and students on technology needs
- Develop a program for technology staff training
- Help prepare teachers for AdvanceED observations
- Incorporate "Every Student Succeeds Act" (ESSA)

V. District Vision and Mission Statements

Mission:

Dillon School District Four will inspire all stakeholders to engage students in creative, innovative, and critical thinking activities that address language arts, science, technology, engineering, and math (STEM) standards, in order to prepare all students for college, future careers and citizenship in the 21st Century.

Belief:

It is our responsibility to rigorously educate every child based on the SC graduate profile according to their individual learning style, to develop world class skills through a relationship that incorporates life and career characteristics that ignites the desire of a lifelong learning process designed to ensure our students thrive in a global economy.

Vision:

Building a new generation of diverse leaders for tomorrow by igniting collaboration and teamwork for a competitive global society.

VI. Plans for the Five Individual Technology Dimensions

Technology Dimension 1: Learners and Their Environment

A. Snapshot of Current Technology Use in District

Dillon School District Four personnel will guide students in grades K-12 to apply developmentally appropriate technology standards to all curriculum areas to communicate effectively, achieve high academic standards, and successfully participate in a rapidly changing information-based society.

At all levels, computers, laptops, projectors, Promethean Boards, software materials, document cameras and digital cameras are available. Study Island is used to engage students and to support and supplement daily learning activities within all content areas. Teachers use such technology to digitally display text materials and use them as tools for analysis. Study Island software, Reading Counts, SRI Enterprise, and MAP assessments are used to reinforce and assess students' learning skills. Students regularly have the opportunity to interact with other students and programs.

Promethean Boards, computers, and CD players are used to interact with students and to assist with research in most content areas, which will help prepare them for high school learning. Digital camcorders record students re-enacting battles and acting out vocabulary words in Social Studies. LCD projectors and document cameras display art for students to analyze. In English, textbook software supplements books and other classroom materials, providing interactive lessons to maintain student interest and engagement. DISCUS is used often in science courses for research. Edmark and PCI are incorporated into lessons in TMD classrooms to enhance the learning of special needs students and to address alternate standards of instruction and daily living skills. Computers are used for MAP testing and other assessments in all schools.

Our high schools employ all previously mentioned tools, as well as other online subscriptions for standardized test preparation, Rosetta Stone Language Software for English Language Learners, and Pearson Realize for benchmark testing and interactive activities to connect to texts. A+ LS software is used to help students recover credit for courses in which they were not previously successful.

In all schools, Destiny Library is employed to circulate library materials. BioConnect is used for biometric scanning to pull up student and staff information in a timely manner. Schools also use SharpSchool to create and maintain school websites and teacher created web pages. The use of ABTutor enables teachers to easily monitor student computer use remotely while in computer labs or computer classes. Teachers at all levels regularly employ programs such as Microsoft Office, PowerTeacher, Curricuplan and Enrich for communication and record-keeping. Enrich is often utilized to create and

manage student assessments. All teachers are required to take the State Technology Assessment to demonstrate proficiency in technology.

B. Overall Goal for This Dimension

Dillon School District Four personnel will guide students in grades K-12 to apply developmentally appropriate technology standards to all curriculum areas to communicate effectively, achieve high academic standards, and successfully participate in a rapidly changing information-based society.

C. Objectives, Strategies, and Action List to Reach Goal

ACTION STEPS	TIMELINE	ESTIMATED RESOURCES	PERSONS RESPONSIBLE	MEANS OF EVALUATION
Provide opportunities and resources to schools to facilitate the development and implementation of effective communication and collaboration skills using technology in the core content areas.	Ongoing		Technology Personnel	Develop a training schedule for technology coach
Conduct student projects that will yield sustained, engaged learning and collaboration in the core content areas and have students present their collaborative projects to identified audiences.	Ongoing	N/A	Teachers	

Provide appropriate accommodations for students with special needs when needed, including standardized tests, using technology.	Ongoing		Director of Technology, Director of Special Services, Testing Coordinator, Guidance, Teachers	
Provide a district technology coach to train teachers in providing these strategies.	Ongoing		Director of Technology, Principals	
Develop technology-enhanced learning activities aligned with state standards in the content areas.	Ongoing		Teachers	
Create and maintain student technology portfolios documenting grade-level-appropriate technology competencies.	Ongoing		Technology Personnel, Teachers	
Create and use lesson activities in which students employ a variety of technology tools, including assistive technology, to complete authentic multidisciplinary tasks.	Ongoing		Teachers, Principal	

Measure student technology proficiency by using the state technology assessment in all grade levels.	Ongoing		Teachers	
Provide students, including those with special needs, access to a range of high and low technology solutions, including software, peripherals, and other tools, such as interactive white boards, document cameras, digital cameras, digital camcorders, and wireless laptops/notebooks, to increase student communication, participation, and collaboration.	Ongoing		Director of Technology, Director of Special Services, Testing Coordinator, Guidance, Teachers	
Adopt and implement a grade-level-appropriate Internet safety curriculum based on the ISTE standard and the state Internet safety standards	Ongoing		Director of Technology	

II. ACTION LIST

1. Focus on reducing the ratio of students to computers and increasing access to technology outside the school environment.
2. Continue to focus on providing all classrooms with Promethean accessories such as ActiVotes and wands, document cameras and mobile wireless notebooks or tablets.
3. Seek funding to provide all students with laptops, notebooks, or tablets.
4. Provide professional development opportunities in developing authentic learning activities that are aligned with state standards and that integrate technology into the core content.
5. Provide access to effective, research-based assistive technologies to support inclusion of students with disabilities in the content courses at all grade levels.
6. Adopt grade-level-appropriated technology standards and competencies based on the ISTE NETS-S.
7. Use Student Technology Proficiency Assessments and Student Portfolios to assess student technology proficiency for all students in grades Kindergarten through 12.
8. Complete initial and ongoing assessments to measure increased availability of technology opportunities and resources using the ISTE Technology Support Index as their assessment guide.
9. Provide basic keyboarding instruction for grades kindergarten through sixth grade, intermediate instruction in middle school, and advanced instruction in high school.

D. Implementation Action Steps for Districts and Schools

DISTRICT

- Focus on reducing the ratio of students to computers and increasing access to technology outside the school environment by seeking funding through grants, monies from the technology budget, Title I funds, and grants.
- Continue to focus on providing all classrooms with interactive white boards, document cameras, mobile wireless notebooks, or tablets.
- Continue to seek funding to provide all students with laptops, notebooks or tablets. Grades 3 and 4 are 1:1.
- Provide access to an on-line database of technology-infused lesson plans.
- Provide professional development opportunities in developing authentic learning activities that are aligned with state standards and that integrate technology into the core content through after school workshops, during grade level planning times, on teacher in-service days, and though online resources.
    - District Technology Coach
    - School Librarians
    - Promethean Planet
    - Study Island
    - eLearningSC PD
    - EdTech conference
    - ClassFlow

- Adopt grade-level-appropriated technology standards and competencies based on the ISTE NETS-S.
- Use the state's Student Technology Proficiency Assessments and Student Portfolios System to assess and document student technology proficiency for all students in grades Kindergarten through 12.
- Complete initial and ongoing assessments to measure increased availability of technology opportunities and resources using the ISTE Technology Support Index as their assessment guide.

SCHOOLS

- Focus on reducing the ratio of students to computers and increasing access to technology outside the school environment by seeking funding through grants, monies from the school technology budget, Title I funds.
- Continue to expand access to effective, research-based assistive technologies to support inclusion of students with disabilities in the content courses at all grade levels.
  - Word recognition software
  - Alternate keyboards
  - Switches
  - Alternate mouse
  - Touch screen
  - Screen magnifier
  - Promethean boards
  - ActivWands
- Continue to provide basic keyboarding instruction for grades kindergarten through sixth grade, intermediate instruction in middle school, and advanced instruction in high school in computer labs using software programs such as Type to Learn and TypingQuest as well as free online keyboarding sites.
- Include integrating technology into the core curriculum in the school improvement plan.
- Encourage home and community involvement in the public school system through the use of the school website, Dillon School District Four custom app, text messages, call system and PowerSchool.
- Implement an on line system for displaying student projects

Technology Dimension 2: Professional Capacity

A. Snapshot of Current Technology Use in District

The goal of Dillon School District Four will assist and encourage educators to effectively integrate technology into their instruction in order to increase student achievement across the curriculum. The mission of Dillon School District Four is to provide on-going professional development to escalate the proficiency of all district personnel, administrators, teachers, and support staff using research-proven strategies, rigorous instruction, and effective integration of instructional technology systems which support South Carolina College and Career Ready Standards and will be used to improve teaching and learning in order to increase student achievement.

Technology is used in all departments and areas in Dillon School District Four. The maintenance department, for example, uses an electronic work order system; library media centers use an automated circulation and catalog system; the food service department uses a biometric identification system, while all instructional personnel frequently integrate web-based applications and other technology into their standards-driven curricula. In the past few years, most classrooms have been equipped with Promethean board/document camera/LCD projector set-ups allowing teachers to use the latest technological devices to enhance classroom instructional practices. Employees across the district have access to hardware and software applications that are relevant to their particular jobs. In addition, historical student assessments are tracked using technology.

Meaningful, sustained professional development is the key to ensuring that Dillon School District Four's educators are well trained in using research-proven technology integration strategies across the curriculum to improve student achievement. The district continues its commitment to professional development by using federal grant funds, along with some general funds and other special revenue to supply resources, training, and support to enable educators to use technology effectively.

A needs assessment is given each year to teachers to determine the required professional development opportunities and levels of proficiency. The district will then, in turn, provide technology workshops that promote acquisition of technology skills and integration of technology activities into daily instruction. The district promotes the use of teacher web pages to involve students and parents in classroom activities. The district will also develop a network of teacher technology leaders who have the expertise necessary to prepare teachers for effective technology use.

Dillon School District Four brought in house the South Carolina Department of Education's e-Portfolio system, which includes a technology assessment and a professional development plan which has been updated to reflect current technology use. All teachers and administrators in the district take the assessment at the beginning of each school year. Staff members who score 80 percent or higher on this assessment are considered to be at the "Mastery" level in terms of their ability to use technology and

to integrate technology into their instruction. An assessment score below 80 percent places a staff member at the "Developing" level in this area. All educators, whether at the developing or the mastery level, must complete 6 hours per year of professional development in the area of technology.

Analysis of the technology assessment, combined with the expansion in technology use through additional resources like the Promethean set-ups previously mentioned, points to the need for continued professional development in instructional technology across the district. Having full-time instructional support for teachers in the district has been beneficial, in that teachers now have many more opportunities than in the past to learn to integrate technology into instructional activities across the curriculum.

Targeted use of the "train-the-trainer" method of delivering professional development has been successful over the years, especially as funds have dwindled. Whereas in some cases it is not feasible to bring in outside trainers or to send many educators to outside training events, it has been effective to provide training to lead educators at the building level and have them, in turn, offer assistance to their peers. It has been effective in the district's targeted use of the "train the trainer" method of professional development delivery. Plans are to continue this practice where it is appropriate to do so. These opportunities, combined with online offerings, will help our district's teachers and administrators achieve greater technology proficiency which will, in turn, contribute to increased student performance.

B. Overall Goal for This Dimension

The goal of Dillon School District Four is to assist and encourage educators to effectively integrate technology into their instruction in order to increase student achievement across the curriculum. The mission of Dillon School District Four is to provide on-going professional development to escalate the proficiency of all district personnel, administrators, teachers, and support staff using research-proven strategies, rigorous instruction, and effective integration of instructional technology systems which support College and Career Ready Standards and will be used to improve teaching and learning in order to increase student achievement.

C. Objectives, Strategies, and Action List to Reach Goal

Objectives:

1. Dillon School District Four will provide leadership at the district and school levels for technology-related professional development.
2. Dillon School District Four will provide instructional technology staff development opportunities and resources to all employees.
3. Dillon School District Four provides professional development that incorporates South Carolina Career and Readiness Standards and the Profile of the South Carolina Graduate.

Strategies:

District

- Sustain a district technology coach. (beginning July through the school year)
- Administer the e-Portfolio System technology proficiency assessment to administrators and teachers. (early Fall)
- Analyze results of the proficiency assessment. (early Fall)
- Share results of the proficiency assessment with school-level administrators. (early Fall)
- Plan workshops and other training opportunities based upon needs. (Fall)
- Implement workshops and training opportunities. (throughout school year)
- Prepare and post directions and tutorials to the Technology Information Site. (throughout school year)
- Perform random and periodic checks of teacher and administrator portfolios to measure the impact of professional development in technology (throughout school year)

Schools

- School leadership teams will include in School Renewal Plan appropriate items from the district technology plan. (late spring/summer)
- Place media specialists in leadership teams. (early Fall)
- Media specialists will assist district technology coach in administering the e-Portfolio System technology proficiency assessment to administrators and teachers. (early Fall)
- Leadership teams will submit training requests that are of particular need to their schools. (early Fall)
- Media specialists and lead teachers will assist the district technology coach in implementing workshops and training opportunities at their individual schools. (throughout the school year)
- Media specialists and lead teachers will provide individual technology integration assistance to educators at their schools. (throughout the school year)
- Media specialists and lead teachers will give reports on school-level professional development to their schools' leadership teams. (throughout the school year)
- Educators will engage in 6 hours of professional development in the area of instructional technology. (throughout the school year)
- Educators will submit evidence via the ePortfolio system of 6 hours per year of professional development credit. (by the end of the school year)
- Educators will submit items to their ePortfolios. (over the course of a 5-year period)

II. ACTION LIST

1. Sustain the employment of a district-level technology instructional support person.
2. Have the media specialists serve on leadership teams at their respective schools.
3. Assign lead teachers to develop expertise in some specific technology systems/applications.
4. Use the "train the trainer" method where appropriate.
5. Send district-level technology personnel and media specialists to EdTech conference when funding permits.
6. Use after-school times, teachers' planning periods, and in-service workdays, as appropriate, for workshops and other training.
7. Use the state's ePortfolio system to assess educators' needs and to plan staff development based upon those needs.
8. Use the state's ePortfolio system to track educators' technology proficiency progress and their ongoing professional development.

D. Evaluation of Objectives

Baseline Data Sources:

- Teacher/Administrator ePortfolio proficiency assessment
- End-of-year technology surveys
- School leadership team reports
- Teacher/Administrator ePortfolio professional development tracking
- Observations

Ongoing Data Sources:

- Teacher/Administrator ePortfolio proficiency assessment
- End-of-year technology surveys
- Teacher/Administrator ePortfolio professional development tracking
- Teacher/Administrator ePortfolio
- School leadership team reports
- Media Specialist logs
- Lead Teacher logs
- Technology Coach logs
- Workshop attendance sign-in sheets
- Observations

ACTION STEPS	TIMELINE	ESTIMATED RESOURCES	PERSONS RESPONSIBLE	MEANS OF EVALUATION
A district-level technology coach will work with educators at all schools.	Ongoing	Salary	Director of Technology Principals	Develop a training schedule for technology coach
The district's media specialists will serve as technology contacts at their respective schools.	Ongoing	N/A	Director of Technology Principals	Media specialists will develop and implement yearly technology goals
Lead teachers at each school will serve as building-level experts in some specific technology systems/applications.	Ongoing	N/A	Director of Technology Principals	Team of teachers in place, agendas of training/coaching sessions
Train the district technology coach, the school level media specialists, and certain lead teachers in the use and integration of relevant and available technology systems	Ongoing	Conference Costs	Director of Technology Director of Instruction Principals	Information from professional development/conference used in training/coaching sessions
Provide workshops and individual support to all educators	Ongoing	N/A	Director of Technology	Rosters indicating participation
Provide directions and online tutorials in the Technology Information Site	Ongoing	N/A	Director of Technology	Manuals and how to available on the district website
Provide opportunities for employees to keep abreast of innovations relevant to their tasks	Ongoing	N/A	Director of Instruction Director of Technology Principals Technology Coach Lead Teachers	Information from teacher survey on use of technology in instruction/task

Technology Dimension 3: Instructional Capacity

A. Snapshot of Current Technology Use in District

Over the past decade, Dillon School District Four has made steady strides in acquiring instructional technologies and using these learning tools to increase student achievement. In our schools, technologies such as two-way video are in the process of being developed through a USDA and IAL grant and we are hoping this will provide more opportunities for our students. Grants continue to provide funds for increased access to technologies such as digital cameras, camcorders, scanners, and tablets as well as subject-specific tools such as science probes.

The state provides software to aid teachers in planning individualized instructional plans and meet state and federal regulations. Enrich is used for developing Individual Education Programs (IEPs) and for collecting statewide data.

The South Carolina State Library provides its virtual library, DISCUS, to all Internet users in the state. DISCUS resources include magazine articles, professional periodicals, newspapers, encyclopedias and other reference publications, government documents, lesson plans, maps, photographs, and historic documents.

Almost all districts in the state take advantage of E-rate discounts. These discounts are used to help pay for high speed lines and Internet access for every school in the state. The schools use E-rate discounts for internal connections, which include switches and routers.

The district provides a wide variety of instructional software such as Study Island, SRI, Reading Counts, SAS Curriculum Pathways and more.

Teachers have access to a wide variety of planning and teaching tools such as Curricuplan, ActivInspire, Destiny WebPath Express and Destiny Standards Search.

B. Overall Goal for This Dimension

Dillon School District Four, and Dillon School District Four Schools will use current and emerging technology to create learner-centered instructional environments that enhance academic achievement.

C. Objectives, Strategies, and Action List to Reach Goal

Objectives:

3.1 Dillon School District Four Schools will develop a technology framework for local planning that addresses the steps necessary to create a technology-rich environment that will foster increased achievement by all students, including those with special needs.
3.2 The Dillon School District Four will provide teachers with the technology resources, including assistive technology, necessary to increase academic achievement by engaging students in active learning.
3.3 Dillon School District Four will provide students with access to current and emerging technology resources that will extend their learning beyond the traditional classroom setting and schedule.
3.4 The school district will provide and support a variety of multimedia equipment and software for teaching and learning.
3.5 The district will provide rubrics for instructional technology use as it prepares for AdvanceEd.

Strategies:

District

- Include assistive technology in the technology plan
- Designate technology leaders
- Evaluate hardware and software for desirable student outcomes and standardize selection when appropriate
- Participate in ongoing, sustained professional development offerings, maintaining a log and a journal for each course, workshop, event, conference, and so forth, to place in portfolios, include training for technology staff
- Enter teacher technology proficiency dates by the announced deadline

Schools

- Conduct technology curriculum planning meetings
- Ensure that teachers and administrators begin keeping technology portfolios
- Interview students to access information literacy and the integration of technology into the classroom

II. ACTION LIST

- Dillon School District Four Schools should conduct technology planning meetings to address curricular design, instructional needs of all teachers, instructional strategies, and appropriate learning environments.
- Dillon School District Four should conduct technology planning meetings to address the inclusion of appropriate assistive technology into curricular design, instructional strategies, and learning environments (general and special education).
- Dillon School District Four should pursue funding opportunities such as grants to provide funds to acquire and maintain hardware and software for use in classroom instruction.
- Dillon School District Four should pursue funding opportunities such as grants to acquire and maintain assistive technology for use in classroom instruction and home access when appropriate.
- Electronic student portfolios should begin to be used to display products resulting from the integration of technology into the core curriculum areas and documentation of student presentations that illustrate the ability to synthesize and analyze information.

  Electronic teacher portfolios should continue to be used to demonstrate the integration of technology in lessons and proficiency in used technology or assistive technologies in instruction.

Evaluation of Objectives:

Baseline Data Sources

- Teacher/Administrator ePortfolio proficiency assessment
- End-of-year technology surveys
- School leadership team reports
- Teacher/Administrator ePortfolio professional development tracking
- Observations

Ongoing Data Sources

- Teacher/Administrator ePortfolio proficiency assessment
- End-of-year technology surveys
- Teacher/Administrator ePortfolio professional development tracking
- Teacher/Administrator ePortfolio
- School leadership team reports
- Media Specialist logs
- Lead Teacher logs
- Technology Coach logs

- Workshop attendance sign-in sheets
- Observations

ACTION STEPS	TIMELINE	ESTIMATED RESOURCES	PERSONS RESPONSIBLE	MEANS OF EVALUATION
Ensure curricular design, instructional strategies, and learning environments integrate appropriate technologies (including the range of assistive technology options) to significantly impact teaching and learning.	Ongoing	Salary	Director of Technology Principals	Statewide achievement test scores. District Report Card Technology Readiness and access surveys
Facilitate the use of technology to support and enhance instructional methods (including software, hardware, and assistive technology) that develop higher-level thinking, decision-making, and problem-solving skills	Ongoing	N/A	Director of Technology Principals	Statewide achievement test scores. District Report Card Technology Readiness and access surveys
Provide teachers with access to knowledgeable personnel, productivity tools, on-line services, media-based	Ongoing	N/A	Director of Technology Principals	Teacher technology proficiency proviso forms. Teachers and administrator portfolios School Technology and improvement

instructional materials, and primary sources of data in settings that enrich and extend teaching goals.				plan
Provide students with access to technology, on-line services, and media-based instructional materials, allowing them to select appropriate tools that will enrich and extend their learning.	Ongoing	Conference Costs	Director of Technology Director of Instruction Principals	Documentation of offerings provided via innovative delivery methods. Technology assessments
Communicate via the district technology plan a vision for multimedia infrastructure designed to support instruction.	Ongoing	N/A	Director of Technology	District Technology Plan Documentation of offerings provided via innovative delivery methods. Technology assessments
Establish a system for identifying, specifying, prioritizing, and managing equipment for multimedia development in direct support of curricular and professional development objectives using ISTE Technology Support Index as a guide.	Ongoing	N/A	Director of Technology	District Technology Plan Documentation of offerings provided via innovative delivery methods. Technology assessments

How the Plan Was Developed:

Staff Training/Professional Development Strategy:

Are there in-service slots set aside for technology-related professional development?

Yes. A district trainer is available to offer training to individuals, groups and schools on new and emerging technologies as well as to provide remediation on technologies currently in use in the district.

Will the professional development be required for all that use it, or is it optional? If optional, what incentives exist to encourage teachers and librarians to pick up these new skills?

Some professional development will be required for all district personnel. Not all professional development that will be offered is required for each staff/faculty member.

Evaluation

How frequently will you update the plan?

The plan will be reviewed annually with updates being made as required by law.

Who is responsible for updating the plan?

The Director of Technology, at the suggestion of the Technology Team, is responsible for updating the plan.

How will you determine if the technology plan was successful in meeting the goals of your institutional plans, i.e. your School District or Library service plan? e.g. Interview/survey staff, patrons, other stakeholders; measuring progress made towards the benchmarks you set out in your goals; observations

Technology portfolios that are maintained by faculty and staff will be used in determining whether the technology plan was successful. Additionally, review of student performance, surveys, continuing needs assessments and observations will be used collectively to assess the success of the technology plan.

Technology Dimension 4: Community Connections

This dimension emphasizes strategies for the development of partnerships and collaborative efforts to support technology-related activities and to maximize community involvement in education. This dimension promotes school and district partnerships with such entities as private schools, higher education institutions, public libraries, museums, nonprofit organizations, adult literacy providers, and business and industry in ways that will increase student achievement and teacher technology proficiency. This dimension aligns with the EOC action areas "Education for Economic Development" and "Community and Parental Support and Involvement."

A. Snapshot of Current Technology Use in District

Computer labs and media centers are the primary technology resources available to the community. Dillon School District Four schools have employed various strategies to provide student, parents, and community members with access to technology.

A major method of communication between home, school, and community are e-mail, telephone, text messaging, SchoolMessenger, the Dillon School District Four custom app, voice mail, websites, the district Facebook page and PowerSchool for Parents.

The K–12 School Technology Initiative partners have used funding to provide services that allow Dillon School District Four to meet state and federal legislative mandates addressed under Community Connections. Programs support legislation from the EEDA, provision of Web-based information for parents and guardians, providing data to community leaders along with tools for data analysis, and using virtual learning to positively impact all learners in South Carolina.

The Dillon School District Four website, www.dillon.k12.sc.us, provides students, parents and the community access to up-to-date information about each school in the district. The home page highlights important announcements, calendars, and upcoming events. Teachers are able to post information about their classes, such as resources, assignments and announcements on a teacher-made web page. Email allows students, parents and the community to communicate with teachers after the traditional school hours. The PowerSchool Parent Portal allows parents to monitor grades and attendance. Parents are also able to register students and/or update demographic information through the district online registration system. School Messenger provides parents and staff with updated information about school closings, health alerts, and attendance through telephone, texts, email, the Dillon School District Four custom app and the district Facebook page.

Dillon School District Four incorporates the DISCUS initiative, made possible by a combination of K–12 School Technology Initiative and State Library funds, that provides all South Carolinians with access to an electronic library of essential information sources, thus supporting the schools, students, and adult learners. The goal is to

ensure equity of access to information regardless of a citizen's local or economic status. DISCUS databases can be accessed using computers that are connected to the Internet at participating higher education institutions throughout the state, as well as from computers in all public libraries and K–12 schools.

Knowitall.org is an ETV initiative, supported by K–12 School Technology Initiative funding, which addresses community connections for the enhancement of student's education. This education web portal contains interactive sites, simulations, image collections, virtual field trips and streaming video that support and provide quality inquiry-based experiences for Dillon School District Four students on the Internet. Knowitall.org can be incorporated into all subject areas including: Career & Technology Education, Foreign Language, Math, Science, Technology, Visual & Performing Arts, English Language Arts, Health and Safety Education, Professional Development, Social Studies and Video & Image Collections.

Other programs that can be accessed outside of school facilities include Study Island, Office 365, Destiny Library Catalog, Visual Thesaurus, TeachingBooks, Novelist and Novelist K-8, Dillon School District Four Virtual Library, and SAS curriculum.

Several schools in Dillon School District Four have partnered with local business and industry as High Performance Partnerships sponsored by the SC Chamber of Commerce. Technology based industries such as First Citizens Bank, Wix Filtration Products, Wyman-Gordon, and Harbor Freight have partnered with the district in order to target specific skills that will be beneficial to students as well as the industries in the community. These partnerships merge the business community's needs with the education community's achievable deliverables.

B. Overall Goal for This Dimension

Through the use of technology and assistive technology, Dillon School District Four will increase student achievement by strengthening community partnerships and increasing community involvement.

C. Objectives, Strategies, and Action List to Reach Goal

Objective 1: Through the use of technology and assistive technology, Dillon School District Four will increase student achievement by strengthening community partnerships and increasing community involvement.

Strategies	Timeline	Budget	Persons Responsible	Means of Evaluation
Form new district-community partnerships and strengthen existing ones to provide students with practical and innovative experiences in the use of technology, including assistive technology, that enhance academic achievement.	Ongoing	Transportation to work sites	District Personnel, School Administration, Career Specialists, Counselors	Statewide achievement test scores District resource guide to available grants and potential community partnerships SDE Technology Counts Survey
Seek grants to fund technology to improve teaching, learning, and community access to technology.	Ongoing	No additional costs	District Technology Director Faculty and staff members, parents, community members	
Improve the transition of students from school to work or higher education through community partnerships that support the use of technology in the workplace.	Ongoing	Transportation to work sites	Career Specialists, Teachers, School Administration	

Objective 2: Dillon School District Four will fully utilize all available technology resources by fostering collaboration and cooperation among state-supported organizations, institutions, and initiatives.

Strategies	Timeline	Budget	Persons Responsible	Means of Evaluation
Identify all of the organizations, institutions, and initiatives that are currently focused on instructional technology applications.	Ongoing	No additional costs	District Technology Director, District Personnel, School Administration	School Technology Plans District and schools' website information District and schools list
Partner with other school districts as well as community entities to provide assistive technology demonstration, loan, and assessment for students with special needs.	Ongoing	No additional costs	District Technology Director, Special Needs Director	

Objective 3: Dillon School District Four will provide after-hours training and community access to labs and media centers.

Strategies	Timeline	Budget	Persons Responsible	Means of Evaluation
Provide opportunities for flexible schedules of after-hours technology access and training for students, parents, teachers, staff, and community members	Ongoing	Building maintenance after hours Staff salaries after hours	School personnel	District and schools list of grants and community partnerships Community technology access surveys Lab, media center, and classroom schedules Student and staff proficiency data District website information Lab, media center, and classroom schedules Documentation of offerings provided via innovative delivery methods Sign in sheets
Publicize opportunities for access to facilities for after-hours assistive technology training for students, parents, teachers, and community members using the District's website and school newsletters.	Ongoing	Printing costs	School administration District personnel	
Provide staff development technology trainings during in-service days and after school hours.	Ongoing	Training materials Staff time	District technology support person Media specialist	

Objective 4: Dillon School District Four will ensure that all their buildings are linked by the Internet to the State Library's DISCUS databases and to the websites of universities, museums, and other institutions to facilitate virtual communication between home, school, and community.

Strategies	Timeline	Budget	Persons Responsible	Means of Evaluation
Provide links to the databases of libraries, museums, and educational educations on the District's website.	Ongoing	No additional costs	District Technology Director	District Website

II. ACTION LIST

- Dillon School District Four will actively seek opportunities for business partnerships that have potential to increase technology access for students, staff, and the community.
- The District will publicly recognize community partners for their involvement in improving student achievement through the use of technology.
- The District will provide professional technology development activities for staff, both required and optional, utilizing the technology coach and the "train the trainer" model. The Director of Technology will coordinate the professional development activities.
- The District will document the use of technology in professional development offerings for teachers, community education, and student internships.
- Dillon School District Four will develop lists of possible partner organizations, institutions, and initiatives that may include the following:

    - South Carolina Commission on Higher Education
    - Dillon County Communities in Schools
    - Distance education learning centers
    - Instructional Television (ITV)
    - Project Share
    - School Technology Initiative
    - The Pee Dee Education Center
    - South Carolina Assistive Technology Advisory Committee
    - South Carolina Assistive Technology Project
    - South Carolina Commission for the Blind
    - South Carolina Department of Disabilities and Special Needs
    - South Carolina Department of Education
    - South Carolina Educational Television (SCETV)
    - South Carolina State Library
    - South Carolina Vocational Rehabilitation Department

D. Implementation Action Steps for Districts and Schools

Schools

- Initiate partnerships with community entities to create greater access to technology and a community learning environment.
- Develop classroom materials to increase access to technology and assistive technology for parents and other community members.
- Include business partners and other members of the community in grant-seeking efforts to increase access and use of school technology facilities.

E. Funding Considerations for District and Schools

Dillon School District Four

- Evaluation of the impact of community partnerships.
- Purchase and maintenance of computer hardware, software and other forms of technology necessary to increase access and provide links to other resources.
- Grant writing experts and workshops.
- Monitor technology proficiency of students and staff annually

Technology Dimension 5: Support Capacity

A. Snapshot of Current Technology Use in District

Dillon School District Four recognizes the vital role of technology support systems to provide the foundation for teaching, learning, communication, and administration in the public schools. The district and state's investment in technology resources can be seen in the amount of hardware and connectivity available to the schools. District goals have been met in critical areas such as the number of servers per school and the number of schools connected to a wide-area network (WAN). Connectivity has been a priority

Effective collection and evaluation of information will lead to decisions backed by quantitative as well as qualitative data. Through ongoing centralized planning and implementation, technical and administrative services and support can be efficiently provided to streamline operations and improve services.

B. Overall Goal for This Dimension

Dillon School District Four will expand and support technology resources to assist educators and learners in meeting the state academic standards.

C. Objectives, Strategies, and Action List to Reach Goal

I. OBJECTIVES AND STRATEGIES GOAL: Dillon School District Four will expand and support technology resources to assist educators and learners in meeting the state academic standards.	
OBJECTIVES	STRATEGIES
5.1 Dillon School District Four will ensure that all students, including those with special needs, and teachers have access to electronic information resources.	A. Maintain a technology that includes the status of current network/Internet access, workstations and other devices available for access, software applications available for addressing state academic standards, peripherals, and other factors related to universal access to network resources B. Conduct needs assessments (1) to identify required network components, workstations, and other devices needed for network access, including assistive technology devices, and (2) to identify and evaluate software applications required to meet academic needs as well as peripherals and other resources required

I. OBJECTIVES AND STRATEGIES

GOAL: Dillon School District Four will expand and support technology resources to assist educators and learners in meeting the state academic standards.

OBJECTIVES	STRATEGIES
	to create universal access to network resources C. Create a district strategic plan for acquiring and implementing the technology, including assistive technology, that is required to provide universal access to network resources D. Develop the district strategic plan with input from all segments of the school community— students, teachers, therapists, administrators, parents, community members, community agencies, and local businesses—and include in the plan a mechanism for review and revision as needed E. Seek school and district funding from available local, state, and federal sources, including E-rate, grants, and bonds
5.2 Dillon School District Four will ensure that its schools have an integrated, secure network infrastructure with dynamic bandwidth capacity to support fully converged networks that allow for communication, data collection and distribution, and distance learning.	A. Establish a system for identifying, specifying, prioritizing, and managing equipment in direct support of curricular and professional development objectives B. Ensure the installation, maintenance, and support of teacher stations in classrooms including data projectors to support large-group instruction C. Research and implement an integrated network infrastructure capable of utilizing all distribution modules D. Install and maintain networks, virus protection, and Internet filtering according to industry standards by implementing systemic, state-of-the-art network security tools at all levels of access to and other networks.

I. OBJECTIVES AND STRATEGIES

GOAL: Dillon School District Four will expand and support technology resources to assist educators and learners in meeting the state academic standards.

OBJECTIVES	STRATEGIES
	E. Maintain a district network management tool that performs automated software installation
5.3 Dillon School District Four will have qualified technical staff, including one networking engineer per WAN, one networking technician per LAN, and one end-user support technician per every three hundred users.	A. Develop minimum staffing requirements and job descriptions for the positions of networking engineer, networking technician, and support technician B. Provide district-level network support and maintain web based system for reporting all technology needs
5.4 The Dillon School District Four will maintain the disaster recovery plan for all points of failure in LANs and WANs, including redundant data storage, robust automated backup, and immediate hardware recovery.	A. Ensure that the district technology plan addresses the disaster recovery plan B. Ensure that schools will have electrical distribution systems that provide isolated circuits in all classrooms and redundant power sources for mission-critical equipment C. Maintain the district management application that monitors bandwidth on the LAN and WAN and provides network failure alarms that can be accessed remotely
5.5 Dillon School District Four will maintain the obsolescence and upgrade plan to replace and recycle equipment and software.	A. Ensure the obsolescence and upgrade plans are included in the district technology plan
5.6 Dillon School District Four will implement its ability to design Web pages and Web-based instruction that are accessible to students and staff with special needs in accordance with Section	A. Provide training in basic Web page accessibility principles to staff, teachers—and, when appropriate, students—who design Web pages as part of the curriculum

I. OBJECTIVES AND STRATEGIES

GOAL: Dillon School District Four will expand and support technology resources to assist educators and learners in meeting the state academic standards.

OBJECTIVES	STRATEGIES
508 of the Rehabilitation Act of 1973 as amended by the Workforce Improvement Act of 1998.	

II. ACTION LIST

- Dillon School District Four will maintain a database with a complete technology inventory, including assistive technology, showing the type of equipment/device, its location, its use, peripherals to which it has access, applications to which it has access, and other relevant information.
- The District should maintain a needs-assessment document showing technology-based resources and applications required to address the mission of the district, including networking, hardware/devices, and software applications as well as assistive technology.
- The District should include in the budget line items for technology, which includes assistive technology, with sufficient funding to implement the designated strategies.
- The District should publish a procedure for the perpetual review of equipment used in multimedia development processes. Reviews should quantify equipment and processes by their impact on teaching and learning.
- The District should maintain a strategic plan for acquiring and implementing technology, including assistive technology, for universal access to network resources. This document should show the strategies for addressing the identified needs, the persons responsible for addressing and completing each strategy, and the resources/funds necessary to fully implement the strategies.
- The District technology plan should include a strategic vision for building a multimedia infrastructure to support instruction.
- The District technology plan should include a disaster recovery plan.
- The District technology plan should include an obsolescence and upgrade plan, including strategies to refurbish, resell, and recycle obsolete devices.

II. ACTION LIST

- The District policies outlined in the district technology plan should include security accountability, virus protection, and Internet filtering guidelines.
- The District should use the SDE Technology Counts on-line survey to report on their use of network management tools.
- The District should ensure that new school construction provides for isolated power in each classroom, computer lab, telecommunications closet, and work area.
- The District should provide UPS (uninterruptible power supply) systems for all critical equipment.
- The District should use the minimum staffing and salary requirements for the positions specified in objective 5.3.
- District staff and teachers should be aware of basic Web accessibility guidelines when designing Web pages.
- The District should designate a Web accessibility resource person to coordinate training and information sharing among district personnel.
- The District should monitor district technology inventories and upgrade on-line inventory process to include on-site critical replacement parts, redundant data storage devices, and any vendor support contacts each district may hold

D. Implementation Action Steps for Districts and Schools

Dillon School District Four

- Create flexible schedules for access to technology
- Implement and maintain technology inventories, including assistive technology
- Conduct needs assessments to identify required technology, including assistive technology
- Maintain a strategic technology plan that includes strategies for acquiring, managing, and implementing required technology, including assistive technology
- Maintain the district disaster recovery plan and an obsolescence and upgrade plan
- Seek funding from local, state, and federal sources
- Maintain secure networks
- Employ staff for adequate network maintenance and support
- Maintain the district management application that monitors bandwidth on the LAN and WAN
- Ensure that schools have adequate electrical distribution systems
- Provide school personnel with the necessary guidance and training in creating Web pages to ensure that electronic information is accessible to students and teachers with special needs

E. Funding Considerations for District and Schools

Dillon School District Four

- Technology committee meetings to update products such as the multimedia infrastructure plan and the disaster recovery plan
- Multimedia teacher workstations including data projectors and ActivPanel Touch Promethean Boards.
- Hardware and software to secure all LANs and WANs to comply with district, state, and industry standards
- Networking engineer, networking technician, and support technician
- Equipment inventory assessment program
- Isolated circuit plan
- Support planning
- Technology needs assessments and surveys

Schools

- Technology staff development for teachers

F. **Evaluation of Objectives** (including baseline data sources and ongoing data sources)

V. EVALUATION			
Objectives	**Possible Baseline Data**	**Possible Data Sources to Be Used for Ongoing Evaluation and End-of-Program Report**	**Timeline**
5.1 Dillon School District Four will ensure that all students, including those with special needs, and teachers have access to electronic information resources. **5.2** Dillon School District Four will ensure that its schools have an integrated, secure network infrastructure with dynamic bandwidth capacity to support fully converged networks that allow for communication, data collection and distribution, and distance learning. **5.3** Dillon School District Four will have qualified technical staff, including one networking engineer per WAN one networking technician per LAN, and one end-user support technician per every three hundred users.	• Statewide achievement test scores • District report cards • Professional developmen t tracking and surveys • District, school, and community surveys • School improvemen t plans • Documented access to technology resources • Technology needs assessment s • SDE	• Statewide achievement test scores • District report cards • Professional development tracking and surveys • Observations and interviews • Documented access to technology resources • District, school, and community surveys • School improvement plans • Documented access to technology resources • Technology needs assessments	Ongoing

V. EVALUATION			
Objectives	**Possible Baseline Data**	**Possible Data Sources to Be Used for Ongoing Evaluation and End-of-Program Report**	**Timeline**
5.4 Dillon School District Four will maintain a disaster recovery plan for all points of failure in LANs and WANs, including redundant data storage, robust automated backup, and immediate hardware recovery.	Technology Counts on-line survey • Budget data	• SDE Technology Counts on-line survey • Budget data • State personnel reports	Ongoing
5.5 Dillon School District Four will maintain an obsolescence and upgrade plan to replace and recycle equipment and software.			
5.6 Dillon School District Four will maintain its ability to design Web pages and Web-based instruction that are accessible to students and staff with special needs in accordance with Section 508 of the Rehabilitation Act of 1973 as amended by the Workforce Improvement Act of 1998.			

How the Plan Was Developed:

Goals and Objectives for Improving Services:

What goals have you identified in your School District or Library service improvement plan?

- Maintain access to computer equipment for teachers and students, including internet access
- Update hardware for speed and memory (obsolete equipment)
- Update software to within 1 year of the latest releases
- Maintain presentation equipment (Promethean boards, bulbs for LCD projectors, etc)
- Provide Promethean boards and LCD projectors to all classrooms in academic areas
- Increase the availability of tablets/computers for classroom use
- Class sets of tablets for using online texts (particularly in the academic areas to remain current and to provide greater access to students for a variety of materials which accommodate various learning styles)
- Continue to expand 1:1 (Grades 3 and 4 have been completed)

What accompanying strategies have already been identified to reach those goals?

- Establish plans for sharing resources
- Apply for grants to increase the amount of updated equipment in the school and for its maintenance
- Apply for grants or enter into partnerships with companies to "field test" books, materials, software, etc to reduce our cost but increase opportunities for our students

What specific telecommunications and information technologies (such as access to the Internet, access to remote databases, distance learning, etc.) are useful in helping you reach those goals?

- Access to computers outside the regular school day would benefit students in need of credit recovery (this necessitates a lab and a monitor or availability of laptops for checking out)
- Distance learning availability for advanced students to access advanced courses, lateral entry classes, or access to college libraries

What are the specific resources (e.g. trainers, selected curricular software, Internet access, links to subscribed databases, etc.) that you plan to help you reach your goals for improved teaching and learning or improved School District or Library service?]

- Current versions of software (i.e. Office, Windows 7, Windows 10, etc.)

- Promethean boards with slates and ActivExpressions
- LCD projectors and replacement bulbs
- Document cameras
- Tablet sets

Staff Training/Professional Development Strategy:

What are the specific resources and strategies that you plan to implement to ensure that your staff is ready to use and maintain the telecommunications and information technologies?

- Weekly tips for security, teaching tips and general staff tips
- Resources – District Technology Personnel
- Microsoft Office workshops for staff not proficient in the use of Word, Excel, PowerPoint, and Publisher
- Office 365 workshops to fully use all resources
- Workshops on developing Promethean flipcharts
- Workshops on use and care of the document camera
- Workshops on setting up class assignments in A+
- Workshops on programs specific to Dillon School District Four
- SharePoint Technology Information site
- Workshops on specific resources to the district

Who will be in charge of coordinating the professional development activities?

- Director of Technology
- Workshops are conducted in-house depending on the availability of the Technology Trainer.

Are there in-service slots set aside for technology-related professional development?

Not currently, but time can be made available on teacher in-service days or in lieu of teacher's meetings.

Will the professional development be required for all that use it, or is it optional? If optional, what incentives exist to encourage teachers and librarians to pick up these new skills?

Staff development would be required of all teachers having access to the materials and would then become a prerequisite to moving to the request list.

What models of professional development would work in your organization to train your staff?

Technology trainer
Lead teachers

After school workshops
School-based workshops
Individual training

What professional development opportunities and resources exist for your technical staff?

None

Do you have the resources in house to train these staff members or do they need to go to outside courses, or a combination of the two?

No

What financial and time resources exist to keep the staff up-to-date in learning about new technologies?

Financial resources are extremely limited to non-existent. Most faculty members do their own research online or through exhibits. The information is shared within the district either by faculty member communication or by workshops the District trainer presents. Technical staff has none except manuals on materials where new programs are implemented.

What professional development opportunities are available from outside sources (such as service providers, courses at institutions of higher education, conferences, courses delivered via distance learning or over the Internet: courses sponsored by your state education or School District or Library agency)?

- e-Learning has workshop opportunities for renewal or graduate credit for teachers who are willing to bear the expense.
- Due to constant budget cuts, the only conferences available to teachers are ones that the teacher pays for or ones mandated by grants/programs and funded through these programs.
- Prometheanlearning.com

What professional development opportunities and resources exist for your professional staff (i.e., librarians) to ensure that they can not only use the new technologies, but to use them to deliver improved School District or Library service?

Technology Department training only

What classes or seminars are available to your staff on an ongoing basis within your organization?

Technology offers a series of one hour workshops after school. The topics are those which support the use of technology with and for students.

Can your staff meet with others who are already further along in implementing technology in another School District or Library?

If the meetings can take place during planning time or in the summer, that is possible. Due to severe budget constraints, it is not possible to have this take place during the school day.

What professional development is available from service providers?

Don't know other than for a fee.

What professional development opportunities are available from outside sources (such as service providers, courses at institutions of higher education, conferences, courses delivered via distance learning or over the Internet: courses sponsored by your state education or School District or Library agency)?]

- The 9 Schools + Project, the FMU Center for Excellence, eLearning offer one day conferences and workshops but they are not always tech related.
- Tech4learning.com
- Prometheanlearning.com

Timeline

- Order new equipment as funds allow
- Develop training
- Offer training

Ongoing Activities:

In classrooms

- Promethean Board – Display worksheets and interactive flipcharts in all ELA and Math classes
- Student Tablets – 1:1 Grant Project
- LCD Projector, Document Camera
- Digital camcorder
- Desktop – email, Internet to access lesson ideas, materials for lessons, Microsoft Word, etc.
- PowerTeacher Pro – Attendance, grades, student information
- Document Camera – Display worksheets and timer
- Student Computers – Various assignments
- Classroom Dashboard in Office 365

In Media Center

- Destiny Library software to circulate library materials.
- BioConnect software to pull up student information when they check out materials.
- ABTutor to monitor what students are doing on the computers in the library & lab.
- MS Office software (Word, Access, PowerPoint, Publisher) to create things to promote the library/reading, etc.
- Scholastic Achievement Manager to manage Reading Counts! program.
- Promethean Board/flip charts to work with classes on information literacy skills.

Budget Summary

The Technology Budget is given to the department on July 1st for the year.

The district has made use of the K-12 Technology money and Proviso 1.88.

Various departments work together to leverage technology funding such as Title I, Title VI, CATE and Exceptional Children.

Evaluation

How frequently will you update the plan?

Every 3 years

Who is responsible for updating the plan?

District Technology Committee

VI. CUMULATIVE TARGETS AND BENCHMARKS

2017–2018

Learners and Their Environment

- Thirty percent of students will have created technology portfolios documenting their acquisition of grade-level-appropriate competencies as well as their use of a variety of technology tools to complete authentic tasks.
- Thirty percent of the students will possess effective communication skills and technology literacy as evidenced by teacher and student technology portfolios and by presentations at technology conferences and fairs.

Professional Capacity

- Sixty percent of Dillon School District Four's teachers will possess technology proficiency as evidenced by teacher technology proficiency assurance forms. Sixty percent of Dillon School District Four's teachers will also demonstrate proficiency by maintaining teacher and student technology portfolios, keeping a journal of course experiences, interacting with the school technology coaches, and integrating technology into the curriculum to teach the state curriculum standards.
- The District will have technology teams who train teachers and visit classrooms to help teachers integrate technology into the curriculum.
- The District's school technology teams, special education coordinator, and technology coordinator will train teachers and visit classrooms to help teachers integrate assistive technology into the curriculum.
- The District will have an assistive technology assessment.

Instructional Capacity

- Thirty percent of the teachers will integrate technology and information literacy skills into their teaching of the South Carolina academic standards as evidenced by the technology proficiency assurance forms and teacher portfolios.
- Thirty percent of students will meet the information literacy and technology skills for their grade level as found on the SDE's performance matrix for information literacy and technology education.

Community Connections

- Dillon School District Four will report a 10 percent yearly increase in community collaborations that result in better teacher and student access to technology, better teacher and student use of technology, more teacher and student real-world experiences in technology-related fields, more research and evaluation of technology projects, and more community collaboration technology grants submitted and dollars funded.
- Dillon School District Four will have a community partnership that provides research and evaluation for a district's major (school-wide or larger) technology projects.

- Dillon School District Four will maintain a K–12 educational portal that lists willing community participants and partners who can provide services to supplement the curriculum.
- Dillon School District Four will provide and document professional development training in how to access and use available community resources. Results will be reported on the SDE on-line professional development tracking system.
- Dillon School District Four will provide access to technology-related facilities after hours for parents, teachers, and community members.

Support Capacity

- Dillon School District Four will include in their technology plan an assessment of their current technology needs, their current technology inventory, and their current technology support strategies.

2018-2019

Learners and Their Environment

- Forty percent of the students will have created technology portfolios documenting their acquisition of grade-level-appropriate competencies as well as their use of a variety of technology tools to complete authentic tasks.
- Forty percent of the students will possess effective communication skills and technology literacy as evidenced by teacher and student technology portfolios and by presentations at technology conferences and fairs.

Professional Capacity

- Seventy percent of Dillon School District Four's teachers will possess technology proficiency as evidenced by teacher technology proficiency assurance forms. Seventy percent of the state's teachers will also demonstrate proficiency by maintaining teacher and student technology portfolios, keeping a journal of course experiences, interacting with the school technology coaches, and integrating technology into the curriculum to teach the state curriculum standards.
- Dillon School District Four's schools will have technology coaches who train teachers and visit classrooms to help teachers integrate technology into the curriculum.

Instructional Capacity

- Forty percent of teachers will integrate technology and information literacy skills into their teaching of the South Carolina academic standards as evidenced by the technology proficiency assurance forms and teacher portfolios.
- Forty percent of students will meet the information literacy and technology skills for their grade level as found on the SDE's performance matrix for information literacy and technology education.

Community Connections

- Dillon School District Four will report a 10 percent yearly increase in community collaborations that result in better teacher and student access to technology, better teacher and student use of technology, more teacher and student real-world experiences in technology-related fields, more research and evaluation of technology projects, and more community collaboration technology grants submitted and dollars funded.
- Dillon School District Four will have a community partnership that provides research and evaluation for a district's major (school-wide or larger) technology projects.
- Dillon School District Four will maintain a K–12 educational portal that lists willing community participants and partners who can provide services to supplement the curriculum.
- Dillon School District Four will provide and document professional development training in how to access and use available community resources. Results will be reported through the SDE on-line professional development tracking system.
- Dillon School District Four will provide access to technology-related facilities after hours for parents, teachers, and community members.

Support Capacity

Dillon School District Four will include in their technology plan an assessment of their current technology needs, their current technology inventory, and their current technology support strategies

VIII. ACKNOWLEDGEMENTS

Technology Committee 2016-2017

Technology Dimension 1: Learners and their environment

- Members: Sandy Cook, Chair
- Marcia Bethea
- Matt Ammons
- Gaye Graham

Technology Dimension 2: Professional Capacity

- Members: Barbara Ann Hawkins, Chair
- Jamilah Campbell
- Michael Rogers
- Kathi Campbell

Technology Dimension 3: Instructional Capacity

- Members: Liz Herlong, Chair
- Wendy McDaniel
- Lynne Davis
- Ruthann Wooten

Technology Dimension 4: Community Connections

- Members: Frankie Camp, Chair
- Tamara Nance-Bethea
- Larece Hunt
- Terry Grimsley

Technology Dimension 5: Support Capacity

- Members: Ann Carlson, Chair
- Audrey Hart
- Candace Bohachic
- Shannon Berry

X. APPENDICES

Appendix 1: Teacher Technology Proficiency Proviso Professional Development Plan

Guidelines for district professional development plans can be found at /offices/tech/announce/proviso140.htm.

South Carolina Legislation

The Teacher Technology Proficiency Proviso
(SDE: Teacher Re-certification—Technology)

Dillon School District Four

- **Standards**
  Our district has adopted the ISTE Teacher Technology Standards.

- **Professional Development Offerings**

The following technology integration professional development opportunities are available to our teachers and administrators: Workshops conducted by the media specialist at each school, courses offered through colleges throughout the area, online courses.

Assessment
Our district conducts on-going assessment to measure technology integration into the classroom curriculum.

- Methods of Assessment:

A. Pre-/post- test
B. Classroom observations (included on STEP 123 Evaluations)
C. Surveys

Timeline
Our district timeline contains Activities, Person(s) Responsible, and Timeframe for three to five year planning horizon with annual update cycle.

Activity	Person(s) Responsible	When
Develop pre-test/survey instrument based on all ISTE Standards	Director of Technology	Ongoing – updated yearly
Pre-test/survey staff to determine needs	Director of Technology	Ongoing – updated yearly

Develop a progressive schedule of professional development offerings to meet identified needs	Assistant Superintendent, Director of Student Services	Ongoing – updated yearly
Create professional development delivery schedule	Assistant Superintendent, Director of Student Services, Director of Technology	Ongoing – updated yearly
Deliver continuous professional development	Assistant Superintendent, Director of Student Services, Director of Technology	Ongoing – updated yearly
Post-test/assess staff to determine proficiency in ISTE Standards	Director of Technology	Ongoing – updated yearly
Once all ISTE Standards have been met, complete information on the PCS system at the South Carolina Department of Education that the teacher is proficient in technology prior to the conclusion of the teacher's validity period	Director of Technology	Ongoing – updated yearly
Annual review and update of technology plan	Director of Technology	Ongoing – updated yearly

□ **District Contact**

The primary contact for implementation and management of this plan is:

Name: Paula Yohe

Title: Director of Technology

District: Dillon School District Four

Mailing Address: 801 South 9th Avenue

City, State, Zip: Dillon, SC 29536

Phone Number: 843-841-3604

Fax Number: 843-774-1214

Email Address: paula@dillon.k12.sc.us

Recommendations for Plan Components

	Minimum	Ideal
Standards	Adopt ISTE standards.	Adopt and expand ISTE standards in accordance with district needs.
Professional Development	A course to prepare teachers to demonstrate proficiency as per proviso.	On-going sustained professional development in a variety of formats for teachers and administrators based on standards.
Assessment Strategies	Multiple choice self-assessment. Teachers are evaluated a minimum of once every certificate validation period.	On-going assessment to measure integration of technology into the classroom curriculum. Ex: portfolio, observation, online self-assessment. Teachers are evaluated annually.
Remediation Strategies	Repeat prep course with minimal feedback	Provide targeted weaknesses with specialized instruction. Approaches include mentoring, individualized assistance/instruction, observation of model classroom
Timeline	Activities, Person(s) Responsible, Time Frame for first year cycle	Activities, Person(s) Responsible, Time Frame for three to five year planning horizon with annual update cycle

Attachment 1: Technology Inventory & IT Skills Inventory

	How many?	
1. Client Devices & Software		
Client Devices		
PCs		
Student	1,046	
Staff	500	
Tablets/Laptops		
Student	982	
Staff	51	
Client Software		
See Attachment 2A		
2. Printers		
Printers		
Function		
Networked (Y/N):Y	142	
Networked (Y/N):N	560	
Telecommunications Services		
Telecommunications lines (voice and data)		
Voice/fax telephone	110/22	
Wireless service telephone (cellular phones, pagers, etc.)	40	
Computer workstations with modems (dial-access)	0	
Leased data circuits (i.e., WAN & Internet)	N/A	
Special telecommunications equipment (TDD – telecommunications devices for the deaf)		
None		
Distance Learning		
High bandwidth, video conferencing links	N/A	
Video retrieval service providers	N/A	
Satellite service providers for distance learning	N/A	
Internal Connections		
Equipment		
Switches – #	140	
Routers - #	10	

Data wiring – what kind?	cat6, cat5, fiber	
Network servers - #	48	
Internet Access		
Direct connections (MPLS) ASE	9	
Internet	1	

Attachment 2: Network Diagram

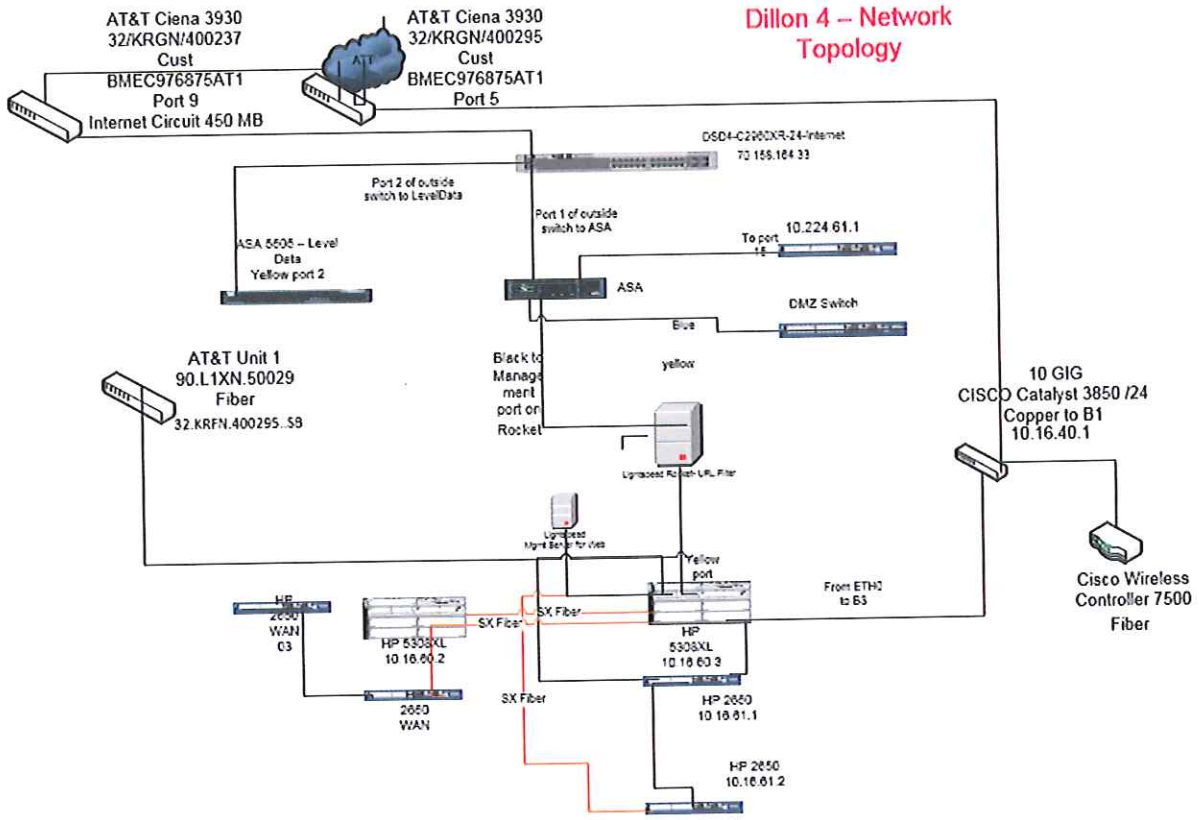

Attachment 2A: Client Software

Software Programs

Teacher Applications

Lifetouch CD
PowerTeacher
PowerSchool
Schoolhouse fonts
PH Literature
Exam View- Multiple Courses
ActivInspire
Microsoft Front Page
Science Transparences
Channel One Interactive
Quicken
Math Fonts
NCS Mentor
SAM Enterprise
Test Taker Admin
Viatest
Cornerstone Teacher
Applied Vision
Science Fonts
TI-SmartView
Test Gen4
Microsoft Outlook
Microsoft Word
Microsoft Access
Microsoft Powerpoint
Microsoft Excel
Moviemaker
Microsoft Publisher
Photostory
Post-it-notes

Teachers Power Pack
Anagrams
Cross Sums
Crossword
Cryptos
Double Anagrams
Kris Kross
Quote Falls
Wordsearch

Avery Wizard
Adobe Reader
Bioconnect
Bound to Stay Bound
Google Earth
WorldWide Telescope

Document camera software
Samsung
Queue
Smart Stream-Vbrick player

District Level
Exchange
Lightspeed My Big Campus
Bioconnect
MAPS Food Service
AbTutor
VendPrint
School Messenger
Docstar
Cisco ASDM
TestView
Netcrunch
Solarwinds
Fitness Gram
Lightspeed Filter
Lightspeed Spam
Lightspeed Email Archive
Sophos
Assure ID
HP Procurve Management
Sharepoint
ILM
Active Directory
Meal Magic
MS Frontpage
SUNS
Adobe Professional
Destiny Textbook
CSI -Finance
CSI-Foodservice
Snagit
KeepnTrack

Student Applications

GeoSkills Primary
Interactive Geography
Jumpstart
KIDPIX
A+
MicroType 4
Animation Master
SCIG Lesson Plans
NCS Mentor for SC
Orchard
Phonics
Reading Counts
SRI Enterprise
Scois
Testtaker
Ultimate Writing Center
Type to Learn
Type to Learn, Jr.

Cornerstone Student-searchable database
Interactive Reading Journey 1
Interactive Reading Journey 2
Word Munchers Deluxe
Reading Vocabulary Level A
Reading Comprehension Level A
Language Arts Level A
Mathematics Level A

Edmark
Bailey's Book House
Mighty Math Carnival
Mighty Math Zoo Zillions
Thinking Science
Thinking Things
Travel the World with Timmy
Trudy's Time and Place
Sammy's Science

Laureate
Skills Tutor
Science Grade 1 Activities
Science Grade 2 Activities
Science Grade 3 Activities

Click and learn
50 States
History
Just 4 Fun
Land
Local Geography
Make Drill
Periodic
SC
Science
Teachers
World Geography
Water

Laureate
Micro-LADS (Microcomputer Lang Assessand Dev Sys)
Module 1: Plurals and Noun-Verb Agreement
Module 2: Verb Forms
Module 3: Prepositions
Module 4: Pronouns
Module 5: Negatives
Module 6: Wh-Questions, Passive and Deictic Expressions
Module 7: Prepositions II

Attainments
Basic Coins
Basic Fractions
Basic Series
Computers at Work
Dollars & Cents
Looking for Words
Match Time
Personal Success
Picture Cue Dictionary
Show Me
Show Me Spelling
Timescales
Word Wise
Author ware
Microsoft Word
Microsoft Access
Microsoft Powerpoint
Microsoft Excel
Moviemaker
Microsoft Publisher
Photostory
MS Paint

Compass Learning - LVE
Read 180
Expert 21

Web-based\Accessible from home

Destiny Library Catalog
Destiny Curriculum Standards

ETV Streamline includes Discovery Education's unitedstreamingTM and ETV, ITV Resources
PowerTeacher
PowerSchool
EOCEP testing
SC Assessments
DiSCUS
Academic OneFile (Gale)
AccessScience (McGraw-Hill)
Amazing Animals of the World (Grolier)
Biography Resource Center + Who's Who (Gale)
Book Review Index Online Plus (Gale)
Business & Company Resource Center (Gale)
Custom Newspapers (Gale)
Educator's Reference Complete (Gale)
Encyclopedia Americana (Grolier)
Expanded Academic ASAP (Gale)
Gale Virtual Reference Library (Gale)
General BusinessFile ASAP (Gale)
General OneFile (Gale)
General Reference Center (Gale)
Grolier Multimedia Encyclopedia (Grolier)
Health & Wellness Resource Center (Gale)
Health Reference Center-Academic (Gale)
History Resource Center: U.S. (Gale)
History Resource Center: World (Gale)
Junior Edition (Gale)

Kids InfoBits (Gale)
LegalTrac (Gale)
Literature Resource Center (Gale)
LitFinder (Gale)
New Book of Knowledge (Grolier)
Nursing Resource Center (Gale)
Opposing Viewpoints Resource Center (Gale)
SC Newspapers: Columbia & Greenville (NewsBank)
Science Resource Center (Gale)
Scribner Writers Series (Gale)
SIRS Discoverer (SIRS)
SIRS Knowledge Source (SIRS)
Small Business Resource Center (Gale)
Student Edition (Gale)
What Do I Read Next? (Gale)
Thinkmap Visual Thesaurus
TechingBooks
NovelList
NovelList K- 8
QuizList Interactive
Curriculator Lesson Planning Software

Web Portal
My Big Campus
Remote Access to files from Home

Skills Tutor
Reading Comp LL
Reading Vocab A
Language Arts A
Math A
K2 Math
K2 Reading
ThinkCentral

District Level Web Based
WCS- Wireless Controller

Sophos
ScheduleStar
Excent
CyberSentry
School Messenger ASP
TestView

Backup Exec for Netware
Backup Exec for Windows
Backup Agents
Meal Magic

Attachment 2B: Server List

mms-epo (sophos)	Windows 2008	MMS-EPO SOPHOS management box Windows 2008
svideo	Windows Server 2003 Standard	Bioconnect
DSDDESTINY01	Windows Server 2012 Standard	Destiny Library,SQL Server 2012 Standard, Jboss, SQL 2005,Destiny SIF Age
csi	Windows 2003	CSI Finance Software
powerschool3	Windows 2003 Server	ZIS, Student Locator, PowerSchool version 6
rcounts2	Windows 2003 Server	Reading Counts, SAM 1.9.2, Jboss, MySQL Server
powerschool4db	Windows Server 2012R2	Oracle 12c (PowerSchool DB)
powerschool4	Windows Server 2012R2	PowerSchool Production 9.2.4
CyberSentry	Windows Server 2008 R2 Standard	State Security Appliance
powerschooltest	Windows Server 2012R2	PowerSchool Test Server for Dillon 4
powerschool	Windows 2003 Server	Dillon 2 PowerSchool - Historical data before consolidation (PS6)
ETV	Windows Server 2008	ETV
etvportal	Windows Server 2008 R2 Ent. 64-bit	ETV SERVER portal
vod	Windows Server 2008 R2 Ent. 64-bit	ETV Portal Server - VOD
dil4-enrich	Windows 2008 R2	Enrich/TestView Server
dillondc01	Windows Server 2008 R2 Std. 64-bit	Active Directory, AD Forest, DNS
foodserv	Windows Server 2003 Standard	FoodService (Meal Magic), sql server, iis server
dsdweb02	Windows Server 2008 R2 Standard	ePortfolio, applitrack, iis 7 server
dsdfs01	Windows Server 2008	file server/application installations/specops
dsddc01	Windows Server 2008 R2 Standard	Active Directory, Domain Controller, DNS, DHCP
powerschool10db	Windows Server 2012 R2	PS version 10 / Oracle 12c / test server
powerschool10	Windows Server 2012 R2	PS version 10 / test server
DSDDIRSYNC	Windows Server 2012R2	DSDDirSync
sasisql	Windows Server 2003 Standard	SQL Server (curriculator db, Aplus db, Sasi db, FitnessGram db)
SpecOps Server	Windows Server 2008	SpecOps
dsdscholastic	Windows Server 2012 R2 (VM Hosted)	scholastic application
dsdbioconnect	Windows Server 2012 R2 (VM Hosted)	bioconnect app & mysql database
dsdfs-csi	Windows 2008 R2	DSDFS-CSI---CSI food service server
dsdregistrar	Windows Server 2008 R2 (VM Hosted)	Registry Gateway, mysql, docushare (IBM)
rcounts	Windows Server 2003 Standard	Curriculator, DynEd
DSDVCENTER	Windows Server 2008	vsdcenter
DSDSCCM01	Windows Server 2012R2	DSDSCCM01
DSDSCCMSQL	Windows Server 2012R2	SQL database for SCCM
dsdwsus01	Windows Server 2008 R2	WSUS
dsdqadbapp01	Windows Server 2012 R2	Testing server for apps & sql databases
dsdmssql01	Windows Server 2008 R2	SQL Server 2012 Standard (eportfolio)
docstar	Windows Server 2003 R2	Records Archiving
DSDSynergy01	Windows Server 2012R2	Senergy
dsdqamssql01	Windows Server 2008 R2 Standard	SQL Server 2012 Standard
dsdregistrar02	Windows Server 2012 R2 Standard	Registration Gateway Repository Xerox Docushare
dsdregistrar03	Windows Server 2012 R2 Standard	Registration Gateway SQL Server 2012R2
sifserver	Windows Server 2003 Standard	Anywhere Learning System (Aplus), alssvr_jetty
DSDMONITOR	Windows Server 2012 R2	SolarWinds/Netcrunch
dsdvmwin764	Windows 7 64-bit	
LSWAM Rocket	Appliance	LightSpeed Content Filtering WAM Next Gen
lightspeed	Windows Server 2003 Standard	LightSpeed Policy Server OLD
www	Windows 2003	Web, LTOv2 Backup Exec 12 Backup Server
dsdsynergy	virtual server for O365 Sharepoint	Sharepoint/Senergy
ddoavaya	Windows Server 2012R2	Avaya
ddodc01	Windows Server 2012R2	domain controller
ddofs01	Windows Server 2012R2	file server/application installations/specops
dhsdc01	Windows Server 2012R2	domain controller
dhsfs01	Windows Server 2008	file server/application installations/specops
dmsdc01	Windows Server 2012R2	domain controller
dmsfs01	Windows Server 2008	file server/application installations/specops
lvhdc01	Windows Server 2012R2	domain controller
lvhfs01	Windows Server 2008	file server/application installations/specops
lvedc01	Windows Server 2012R2	domain controller
lvefs01	Windows Server 2008	file server/application installations/specops
eesdc01	Windows Server 2012R2	domain controller
eesfs01	Windows Server 2008	file server/application installations/specops
gesdc01	Windows Server 2012R2	domain controller
gesfs01	Windows Server 2008	file server/application installations/specops
sesdc01	Windows Server 2012R2	domain controller
sesfs01	Windows Server 2008	file server/application installations/specops
shedc01	Windows Server 2012R2	domain controller
shefs01	Windows Server 2008	file server/application installations/specops

Attachment 3: Internet Use Policy

DILLON SCHOOL DISTRICT FOUR
FACULTY AND STAFF ACCEPTABLE USE/INTERNET AND EMAIL ACCESS PROCEDURES

IJNDB-R(2)

This document contains the Acceptable Use /Internet and Email Access Procedures for faculty and staff for IJNDB.

DIRECTIONS: Faculty and staff should read this entire document carefully, then sign and date the accompanying Staff Certification Form and return it to the appropriate supervisor.

For the purpose of these procedures, technology is defined as, but not limited to the following:

a. All workstations (both desktop and portable), printers, scanners and other peripherals;
b. Learning resource management systems, including library automation systems;
c. Distance learning systems;
d. Video capturing, broadcast, receiving, and distribution systems;
e. Teleconferencing systems;
f. All software;
g. Office copier, imaging, and document management systems that would be connected to computer network;
h. Cameras, whiteboard systems and peripherals; and
i. Web-based subscription software packages.

Faculty and staff may access the Internet for educational or job-related purposes when it does not interfere with job responsibilities during the school day.

The use of the District electronic network will adhere to the following:

a. Be consistent with the South Carolina Department of Education approved curriculum adopted by the District that meets instructional needs, learning styles, abilities and development levels of the students.
b. Comply with the selection criteria for instructional materials and library-media center materials.

The District electronic network is part of the curriculum and is not a public forum for general use.

Faculty and staff should be aware that the contents of any files on the District computer system will be monitored, e.g. jump drives, CDs, digital cameras and other such devices

and are the property of the District. Routine maintenance and monitoring may lead to the discovery that faculty and staff have violated policies/rules addressed herein, or state/federal laws. If a violation is found, an investigation will follow that will be reasonable and related to the violation.

A faculty or staff member who violates the terms of this administrative rule or otherwise misuses the Internet to access inappropriate material will be subject to disciplinary action, up to and including discharge.

Faculty and staff should read the following carefully. **Faculty and staff will not do the following:**

1. Use the District electronic network for commercial purposes. This means faculty and staff may not offer, provide, or purchase products or services through the District electronic network. Any fees or charges resulting from misuse of the District electronic network will be the responsibility of faculty and staff.

2. Use the electronic network for political lobbying.

3. Attempt to gain unauthorized access to the District electronic network or to any other computer systems through the District electronic network or go beyond their authorized access. This includes attempting to log in through another person's account or access another person's files. These actions are illegal.

4. Make deliberate attempts to disrupt the computer system or destroy data by any other means such as spreading computer viruses. These actions are illegal. Deliberately deleting/destroying any computer programs, systems, or data files will not be permitted.

5. Use the District electronic network to engage in any other illegal act.

6. Provide their password to another person. Passwords and other electronically recorded data are the property of Dillon School District Four. Modifying passwords without appropriate authorization is prohibited. Any other computer access accounts other than those assigned to the individual should not be used. This includes misrepresenting self through the use of another person's ID or use of an anonymous ID and using another user's workstation while the user is logged onto the District electronic network. Each user should only use his/her login and password. This information should not be publicly displayed or shared with other individuals. If a user logs onto the computer network using his/her individual password, the individual should log off the network when he/she leaves the workstation. Faculty and staff will be held responsible for any of the above violations.

7. Attempt to gain unauthorized access to the District's electronic technologies or any other system through the District's electronic technologies, attempt to login

through another person's account or use computer accounts, access codes or network identification other than those assigned to the user. Users must keep all account information and passwords private.

8. Search for security problems in the District electronic network; this will be considered as an illegal attempt to gain access.

9. Download large files unless absolutely necessary. Downloading large files should be done when the system is not being used heavily, and such files should be removed from the system immediately. Users will not use a computer to create, use or download materials that would not be permissible in Dillon School District Four in any form (i.e., obscene, profane or pornographic materials.)

10. Violate the copyright rights of owners. Copyright violations occur when an individual inappropriately reproduces a work that is protected by copyright. If a work contains directions that specify appropriate use of that work, the individual must follow the expressed requirements. If the individual is unsure whether or not he/she can use a work, he/she should request permission from the copyright owner. Copyright laws can be very confusing, so if an individual has questions, he/she should ask the library media specialist. Unauthorized accessing or duplication of computer programs, systems or data files will not be permitted. This may also be a copyright violation and as such is subject to federal copyright laws. Computer programs and manuals are copyrighted property and are not to be copied or altered in any form.

11. Use the District's electronic network to access, review, upload, download, complete, store, print, post, receive, transmit or distribute any of the following:

    a. Pornographic, obscene or sexually explicit material or other visual depictions;
    b. Obscene, abusive, profane, lewd, vulgar, rude, inflammatory, threatening, disrespectful or sexually explicit language;
    c. Materials that use language or images that are inappropriate in the education setting or disruptive to the educational process;
    d. Materials that use language or images that advocate violence or discrimination toward other people or that may constitute harassment, discrimination or threatens the safety of others;
    e. Shopping online during time designated as work time by the District;
    f. Storage of personal photos, videos, music or files not related to educational purposes for any length of time during designated work times.

12. Use the District electronic network for any illegal activities. Illegal activities include, but are not limited to:

    a. tampering with computer hardware or software;
    b. software piracy;
    c. unauthorized entry into computers and files (hacking);

d. knowledgeable vandalism or destruction of equipment;
e. deletion of computer files belonging to someone other than oneself;
f. uploading or creating of computer viruses;
g. distribution of obscene or pornographic materials; and
h. sexting.

Such activity is considered a crime under state and federal law. Users must be aware that any illegal action carried out over the Internet will be reported to law enforcement officials for possible prosecution. Please be advised, it is a federal offense (felony) to break into any security system. Financial and legal consequences of such actions are the responsibility of the user (staff, volunteer and student) and student's parent/legal guardian.

13. Use the District electronic network to post information in public access areas regarding private or confidential information about another person. Private or confidential information is defined by board policy, state law and federal law.

    a. This paragraph does not prohibit the posting of employee contact information on District web pages;
    b. This paragraph does not prohibit communications between employees and other individuals when such communications are made for legitimate education reasons or personnel-related purposes (i.e. communications with parents/legal guardians or other staff members);
    c. This paragraph specifically prohibits the use of the District electronic technologies to post private or confidential information about another individual, employee or student on social networks.

14. Provide system access to unauthorized individuals, especially non-employees of the District.

15. Theft or vandalism of any computer, printer, port, file server or computer accessories will result in disciplinary action.

16. Use the computer to tamper with, change or alter records or documents of the District including grades, financial information, etc.

17. Use anonymous proxies to get around content filtering; this is strictly prohibited and is a direct violation of this agreement.

18. Access restricted computer equipment, such as servers or locked cabinets with electronic equipment, without authorization.

19. Download or install any commercial software, shareware or freeware onto network drives without prior permission of the Director of Technology.

20. Change settings on web browsers or any other applications.

In addition, the following will apply:

1. Caring for computer equipment is a serious issue. Objects should not be placed on monitors, computers or keyboards. Food and beverages should not be used in the vicinity of computers.

2. Students are not permitted to use the workstation that is assigned to a faculty or staff member.

3. All software must be purchased by the school and/or the District Office. District employees may not purchase and load software on District network and/or stand-alone computers.

4. Software that has been installed in violation of the copyright law will be removed by the District Technology Staff. Users must have prior approval from the Principal for any software installations.

5. The District will inventory software on networked computers.

6. All data should be stored on the user's Home Directory that is on the network. If a workstation has to be re-imaged, all data stored on the C: drive (hard drive) will be lost.

7. Faculty and staff should not have an expectation of privacy or confidentiality in the content of electronic communications or other computer files sent and received on the school computer network or stored in the user's directory or on a disk drive. Network storage areas will be treated like school lockers, which may be inspected at anytime. The Dillon School District Four system also reserves the right to examine all data stored on diskettes involved in the user's use of the Dillon School District Four Internet service. Internet messages are public communication and are not private.

8. All communications including text and images may be disclosed to law enforcement or other third parties without prior consent of the sender or the receivers. Network administrators may review communications to maintain integrity system-wide and ensure that users are using the system in a responsible manner. The Dillon School District Four system monitors the online activities of users.

9. Faculty and Staff Internet activities will be monitored by the District to ensure faculty and staff are not accessing inappropriate sites that include obscenity and pornography. The District is required by the Children's Internet Protection Act to use filtering software for all electronic devices to protect employees from inappropriate access.

10. The District makes no guarantee that the functions or the services provided by or through the District electronic network will be error-free or without defect. The District will not be responsible for any loss of data or interruptions of service. The District is not responsible for the accuracy or quality of the information obtained through or stored on the system. The District will not be responsible for any financial obligations arising from the unauthorized use of the system.

Email Accounts

The following guidelines will apply to all email accounts:

a. Use of District email accounts from any locations still falls under the same guidelines since all emails flow through the District equipment.
b. Use of outside personal email accounts should be limited throughout the school day.
c. All faculty and staff are expected to use email in a professional, legal and ethical manner. Intentionally changing the date, time or other related information will not be tolerated. All email should contain the true identity of the sender. When faculty and staff use the District email system, they are representing the District.
d. Email signatures should include the following:

    1. Name
    2. Professional Title/Position
    3. School Name
    4. School Phone Number
    5. District's Web Site URL

    Email signatures may not include the following:

    1. Quotes
    2. Religious Statements
    3. Political Statements
    4. Group/Organization Memberships

e. Faculty and staff may not send any email to your entire school, multiple schools or the District without obtaining appropriate permission from their building administrator.
f. Faculty and staff will not open attachments from anyone they do not know. Attachments can be the source of viruses.
g. Faculty and staff will log out of the email system when they are finished.
h. Faculty and staff will not respond to spam, e.g. unsolicited junk mail or chain letters.
i. Email is not considered private. Faculty and staff will not put anything into email that they would not want released to the public. Faculty and staff will avoid jokes, offhand comments and wording that might be misinterpreted. Sensitive

information should never be discussed in email.

j. Faculty and staff will not post chain letters or engage in "spamming." Spamming is sending an annoying or unnecessary message to a large number of people.

k. Faculty and staff will not repost or resend a message that was sent to them privately without the permission of the person who sent the message.

l. Faculty and staff will not use inappropriate language in public or private messages, or in other material that may be accessed by others. Inappropriate language includes the following:

   aa. Obscene, profane, lewd, vulgar, rude, inflammatory, threatening or disrespectful language.

   bb. Language that could cause damage, danger or disruption.

   cc. Personal attacks, including prejudicial or discriminatory attacks.

   dd. Harassment or persistently acting in a manner that distresses or annoys another person; if a faculty or staff member is told by a person to stop sending them messages, the faculty or staff member must stop.

   ee. Posting false or defamatory information about a person or organization.

m. Messages are not deleted. Copies of all messages exist on other servers and workstations and are archived by the District.

n. Messages and records on the District electronic technologies may not be encrypted without the permission of the Director of Technology.

o. A court order or an investigation may require the District to provide electronic files. This information will be provided under direction from the Superintendent.

p. A user's privacy is not to be violated. All users' privacy will be protected by the mail system administrator. Faculty and staff will not leave passwords in plain view of others, give passwords to others or leave confidential information on a computer screen in view of others.

q. Disciplinary action will be taken when violation of the email system has occurred.

r. Faculty and staff are expected to manage the mail that is delivered to their mailbox. It is the user's responsibility to delete accumulated messages. Storage is limited and a large accumulation of mail may require the Technology Office to contact the individual user to alert the user to the problem. If the problem persists, permission will be obtained from the Superintendent to inactivate the user's email account.

s. Faculty and staff will not receive or transmit information pertaining to dangerous instruments such as bombs or other explosive devices, automatic weapons or other firearms, or other weaponry.

t. The District monitors faculty and staff correspondence and email. If the District suspects violations of law, harassment of others or violation of other District policies, disciplinary action will be taken by the Superintendent.

u. Electronic mail messages are backed up and will be inspected by appropriate school administrators. The District reserves the right to inspect electronic mail and computer generated logs regarding web sites visited by users that the District deems necessary and appropriate to ensure proper use of resources and to conduct routine network maintenance.

v. Complaints by users concerning the use of the District email system should be sent to the Director of Technology. If the complaint is not resolved, it will be

referred to the Superintendent.

Personal Social Networking

The following guidelines are for faculty and staff engaging in social networking for personal use:

1. When using your personal social networking sites, faculty and staff will refrain from fraternization with students.

2. Faculty and staff will ensure that social networking postings are appropriate for the public.

3. Faculty and staff will weigh whether a posting will put their effectiveness as a faculty or staff member at risk.

4. Faculty and staff will use caution with regard to exaggeration, profanity, guesswork, copyrighted materials, legal conclusions and derogatory comments.

5. Faculty and staff will ensure compliance with data privacy laws and District policies. Faculty and staff will be held responsible for inappropriate disclosure, whether purposeful or inadvertent.

6. Faculty and staff will respect their co-workers and students. Faculty and staff will not discuss students, their families or co-workers.

7. Student images obtained from a faculty or staff member's employment with the District may not be included on personal social networking sites.

8. Faculty and staff will set privacy settings carefully to ensure that they know who has access to the content on their social networking sites.

9. Social media identifications, login identifications and user names must not contain the District's name or logo.

Dillon School District Four
Acceptable Use/Internet and Email Access Procedures
Staff Member Certification Form
IJNDB-E(2)

I have read and understand the District's Acceptable Use/Internet and Email Access policy and rule. I understand and will abide by the conditions and rules set forth therein. I further understand that violations of these conditions and rules are unethical and also may constitute a criminal offense. Should I commit any violation, my access privileges may be revoked, disciplinary action may be taken and appropriate legal action also may be instituted. I also agree to be responsible for any unauthorized costs incurred by my use of the Internet.

_____ _____

Signature of Staff Member Date

DILLON SCHOOL DISTRICT FOUR
STUDENT ACCEPTABLE USE/INTERNET AND EMAIL ACCESS PROCEDURES

This document contains the Acceptable Use/Internet and Email Access Procedures for IJNDB of the Board Policy Manual.

DIRECTIONS: Parents and students should read this entire document carefully, then sign and date the accompanying Student/Parent/Legal Guardian Certification Form and return it to the school. Students who have permission will be allowed to use networked computers and to have access to the Internet.

Students are expected to follow the rules set forth in the Student Behavior Code JICDA-R, as well as any applicable state and federal laws, in the use of the District network.

Students will promptly disclose to their teacher or other school personnel any message they receive that they feel is inappropriate or makes them feel uncomfortable.

Parents/legal guardians should inform their children of any material they think would be inappropriate for their children to access. The District fully expects students to follow their parents'/legal guardians' instructions in this matter.

Students have the right to free speech as set forth in the Board Policy JC which applies also to communication on the Internet. Electronic posting of material is considered a limited forum, similar to a school newspaper, and therefore the District may restrict students' speech for valid educational reasons. The District will not restrict student speech on the basis of a disagreement with opinions being expressed.

Students should expect only limited privacy of the contents of any personal files on the District computer system. This situation is similar to the rights of privacy in the use of student lockers. Routine maintenance and monitoring of the District computer system may lead to the discovery that students have violated policies/rules addressed herein, or state/federal laws. If a violation is found, an investigation will follow that will be reasonable and related to the violation.

In the event there is a claim that the student has violated this policy or the Student Behavior Code JICDA-R, appropriate action will be taken according to the District Discipline Code.

Students and their parents/legal guardians should read the following carefully. **Students will not do the following:**

1. Use the District electronic network for commercial purposes. This means students may not offer, provide, or purchase products or services through the District electronic network. Any fees or charges resulting from misuse of the District electronic network will be the responsibility of students and their parents/legal guardians.

2. Post personal contact information about themselves or other people. Personal contact information includes address, telephone number, school address, work address, etc.

3. Agree to meet with someone they have met online.

4. Attempt to gain unauthorized access to the District electronic network or to any other computer systems beyond their authorized access. This includes attempting to log in through another person's account or access another person's files. These actions are illegal, even if only for "browsing".

5. Make deliberate attempts to disrupt the computer system or destroy data by any other means, such as spreading computer viruses. These actions are illegal. Deliberately deleting/destroying any computer programs, systems, or data files will not be permitted.

6. Use the District electronic network to engage in any other illegal act, such as arranging for a drug sale or the purchase of alcohol, engaging in criminal gang activity, threatening the safety of persons, etc.

7. Provide their password to another person. Students will be held responsible for any problems or trouble this may cause. Passwords and other electronically recorded data are the property of Dillon School District Four. Modifying passwords without appropriate authorization is prohibited. Any other computer access accounts other than those assigned to the individual should not be used. This includes misrepresenting self through the use of another person's ID or use of an anonymous ID and using another user's workstation while the user is logged onto the network. Each student should use only his/her login and password. This information should not be publicly displayed or shared with other individuals. If a student logs onto the computer network using his/her individual password, the student should log off the network when he/she leaves the workstation.

8. Search for security problems in the District electronic network; this will be considered as an illegal attempt to gain access.

9. Download software without following District virus protection procedures and without permission from someone in authority.

10. Use inappropriate language in public or private messages or in other material that may be accessed by others. Inappropriate language includes:

    a. Obscene, profane, lewd, vulgar, rude, inflammatory, threatening or disrespectful language.
    b. Language that could cause damage or a danger of disruption.
    c. Personal attacks, including prejudicial or discriminatory attacks.
    d. Harassment, or persistently acting in a manner that distresses or annoys another person; if a student is told by a person to stop sending them messages, the student must stop.
    e. Posting false or defamatory information about a person or organization.

11. Post chain letters or engage in "spamming". Spamming is sending an annoying or unnecessary message to a large number of people.

12. Plagiarize works found on the Internet; plagiarism is taking the ideas or writing of others and presenting them as if they were the student's own.

13. Violate the copyright rights of owners. Copyright violations occur when a student inappropriately reproduces a work that is protected by copyright. If a work contains directions that specify appropriate use of that work, the student must follow the expressed requirements. If a student is unsure whether or not he/she can use a work, he/she should request permission from the copyright owner. Copyright laws can be very confusing, so if students have questions, they should ask the library media specialist. Unauthorized accessing or duplication of computer programs, systems or data files will not be permitted. This may also be a copyright violation and as such is subject to federal copyright laws. Computer programs and manuals are copyrighted property and are not to be copied or altered in any form.

14. Vandalism of computer hardware will result in disciplinary action. Vandalism includes, but is not limited to, removing mouse ball and/or mouse, etc. Deliberately tampering with a computer system includes: switching cables, disabling fans, removing patch cables, disconnecting printers, disconnecting monitors, etc.

15. Theft or vandalism of any computer, printer, port, file server or computer accessories will result in disciplinary action.

16. Use the computer to tamper with, change or alter records or documents of the District including grades, financial information, etc.

17. Access restricted computer equipment, such as servers or locked cabinets with electronic equipment, without authorization.

18. Caring for computer equipment is a serious issue. Objects should not be placed on monitors, computers or keyboards. Food and beverages should never be used in the vicinity of computers.

19. Student Internet activities will be monitored by the District to ensure students are not accessing inappropriate sites that include obscenity, pornography or anything that is harmful to minors. The District will use filtering software to protect students from inappropriate access, as required by the Children's Internet Protection Act.

Student Email Account Guidelines:

The following guidelines will apply to student email accounts:

a. All students are expected to use email in a professional, legal, and ethical manner. Intentionally changing the date, time, or other related information will not be tolerated. All email should contain the true identity of the sender. When a student uses the District email system, he/she are representing his/her school.
b. Email should primarily be used for school-related business. Personal use of email should be limited.
c. Students will not open attachments from anyone they do not know. Attachments can be the source of viruses.
d. Students will log out of the email system when they are finished.
e. Students will not respond to spam; e.g. unsolicited junk mail or chain letters.
f. Email is not considered private. Students should not put anything into email that they would not want published. Students will avoid jokes, offhand comments and wording that might be misinterpreted. Sensitive information should never be discussed in email.
g. Messages are not necessarily deleted. Copies of messages exist on other servers, workstations and in some cases, tape backup systems.
h. A court order or an investigation may require the District to provide electronic files. This information will be provided under direction from the Superintendent.
i. A user's privacy is not to be violated. All users' privacy will be protected by the mail system administrator. Students will not leave passwords in plain view of others, give passwords to others or leave confidential information on a computer screen in view of others.
j. Appropriate disciplinary action will be taken when violation of the email system is discovered.
k. Use of the District's email accounts from home still falls under the same guidelines, since all email flows through District equipment.

Website Information Guidelines:

The District makes no guarantee that the functions or the services provided by or through the District electronic network will be error-free or without defect. The District will not be responsible for any loss of data or interruptions of service. The District is not responsible for the accuracy or quality of the information obtained through or stored on the system. The District will not be responsible for any financial obligations arising from the unauthorized use of the system.

When students are using the District electronic network, they should remember that in using the network they are leaving little "electronic footprints"; therefore, the odds of getting caught doing something against the rules or the law are about the same as in the "real" world.

No student or employee's personal information (e.g. home address, home email address, or home phone number) will appear on the Dillon School District Four website.

Directory Information

As specified in the Student Records Policy and Rule JRA, the District will use directory information to do the following:

a. Publish full names of students in connection with class rosters, email, honor rolls, awards received and team/extracurricular activity participant lists.
b. Publish group and/or individual photographs of students.
c. Use pictures of students taken at public events on web pages.
d. Publish student work or individual pictures on the website.
e. Publish student bylines limited to first name followed by last name initial.
f. Publish individual student or class work on the District's website from time to time in accordance with established guidelines. Such work may include creative writing, research projects, art work, music, performances and audio-visual presentations.

The District will not do the following:

a. Identify individual students in photographs appearing on web pages.
b. Use student surnames to identify photographs.
c. Use documents that include any information that indicates the physical location of a student at a given time, other than attendance at a particular school or participation in school activities.

Bullying/Cyberbullying

a. The board prohibits acts of harassment, intimidation or bullying of a student by students, staff and third parties that interfere with or disrupt a student's ability to learn and the school's responsibility to educate its students in a safe and orderly

environment whether in a classroom, on school premises, on a school bus or other school-related vehicle, at an official school bus stop, at a school-sponsored activity or event whether or not it is held on school premises, or at another program or function where the school is responsible for the student.

b. Harassment, intimidation or bullying is defined as a gesture, electronic communication or a written, verbal, physical or sexual act reasonably perceived to have the effect of either of the following:

    a. harming a student physically or emotionally or damaging a student's property or placing a student in reasonable fear of personal harm or property damage;
    b. insulting or demeaning a student or group of students causing substantial disruption in, or substantial interference with, the orderly operation of the school.

c. Any student who feels he/she has been subjected to harassment, intimidation or bullying is encouraged to file a complaint in accordance with procedures established by the Superintendent.

Dillon School District Four
Acceptable Use/Internet And Email Access Procedures
Student/Parent/Legal Guardian Certification Form
IJNDB-E(1)

<u>For Parents/Legal Guardians</u> (Parent/Legal Guardian Signature Required):

As the parent/legal guardian of this student, I have read and I understand the District's Acceptable Use/Internet and Email Access Procedures policy and rule as they apply to students. I understand that this access is designed solely for educational purposes. I further understand that if my child violates the conditions and rules stated in the Acceptable Use/Internet and Email Access policy and rule, then his/her access privilege may be revoked for up to one year and disciplinary action may be taken. I also understand that if my child incurs any unauthorized costs in the use of the Internet, I will be responsible.

_____ _____
Signature of Parent/Legal Guardian Date

_____
Student Name

<u>For Students</u> (Grades 4-12/Student's Signature Required):

I have read and I understand the District's Acceptable Use/Internet and Email Access Policy for students. I understand and will abide by the conditions and rules in this policy. I further understand that violations of these conditions and rules are unethical; some may constitute a criminal offense. Should I commit any violation, my access privileges may be revoked for up to one year and disciplinary action may be taken. My parents/legal guardians and I will be responsible for any unauthorized costs, and appropriate legal action also may be taken.

_____ _____
Signature of Student Date

***Must Be Completed By All New Students**

****To Be Completed By Currently Enrolled Students If Field is Blank or No in PowerSchool**