Pattern for Base 10 Measuring Tape

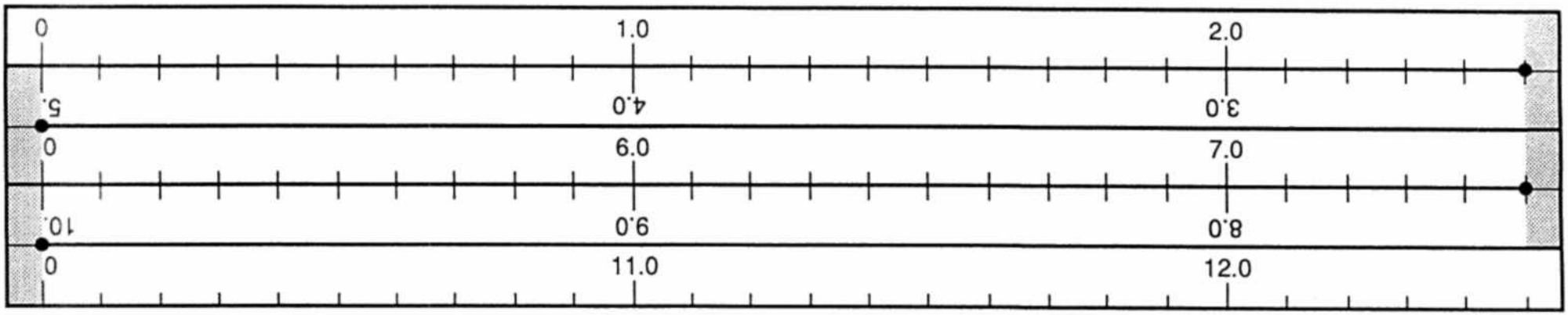

1. Cut along all heavy lines.

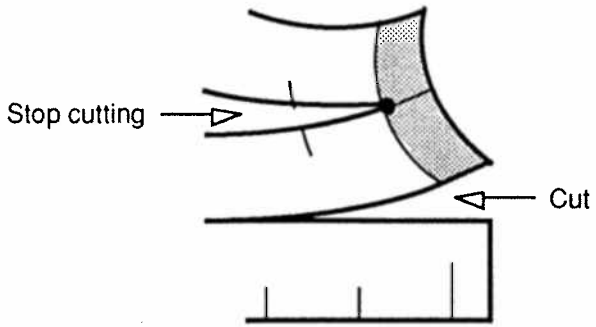

2. Fold in shaded areas:

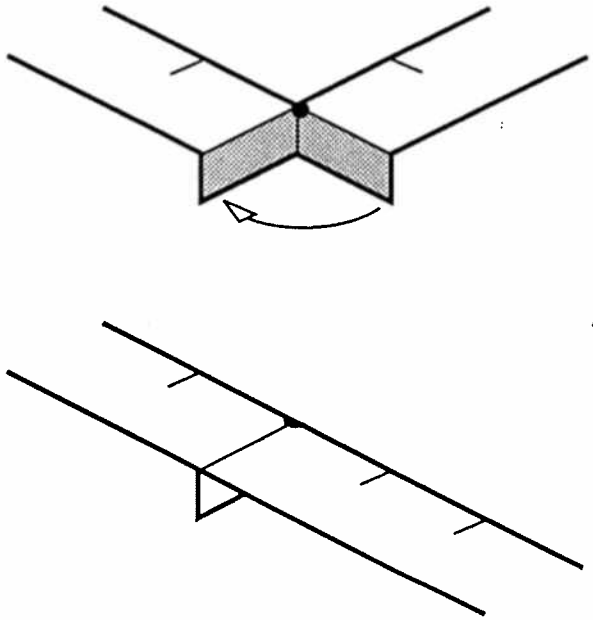
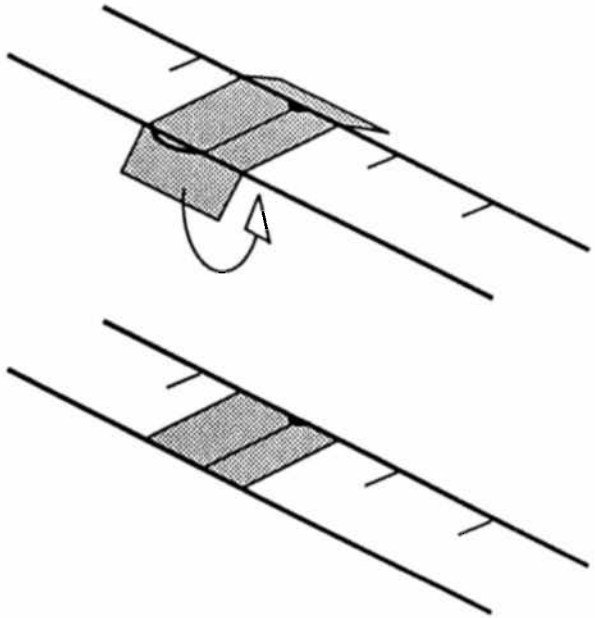
3. Flatten tab and wrap connection with scotch tape: